FALCON

Rooftop Units
ACPSE 50/60Hz
Cooling Capacity : 36 to 1388 MBH (11 to 407 kW)
Heating Capacity : 40 to 1298 MBH (12 to 380 kW)

R410A

DUNHAM-BUSH®

Products that perform...By people who care

NOMENCLATURE

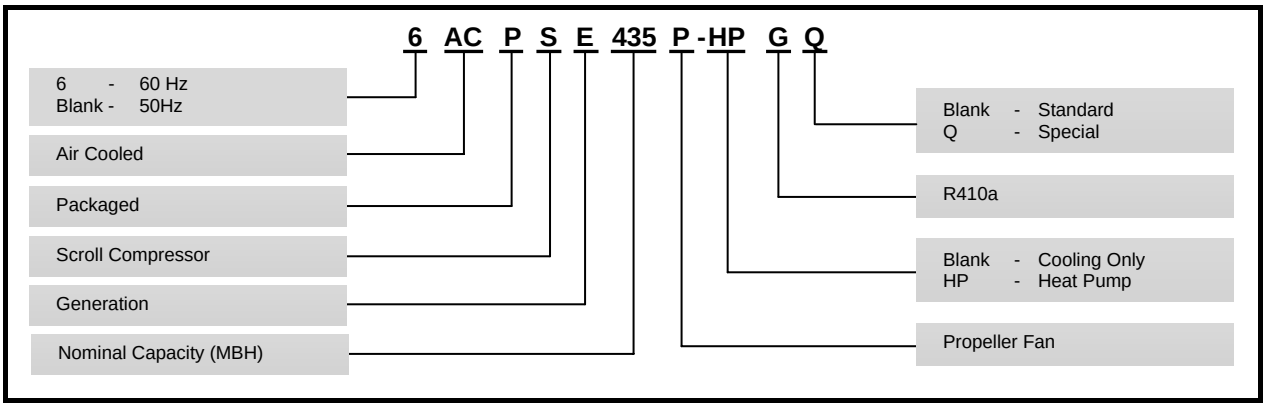

GENERAL DESCRIPTION

The ACPSE-P Series with new features is suitable for hotel, office, hospital, school, factory and supermarket applications. The low noise and compact series are completely leak tested, evacuated, dehydrated and charged with refrigerant prior to shipment.

REFRIGERANT R410A

- ACPSE-P Series uses the environmentally friendly refrigerant, R410A in each system.
- Zero ozone depletion potential.

HERMETIC SCROLL COMPRESSOR(S)

Reliability

- No contact scroll design that minimizes friction, increases volumetric efficiency and reduces vibration, thus longer service life.
- Suction gas cooled motor.

Low Power Consumption:

- High EER.
- No crankcase heater required.

CLASS F INSULATION CONDENSER FAN MOTOR

- Extra safety margin and longer motor life even in extreme operating conditions.
- IP 55 construction ensure extra motor protection (ACPSE Series 68P to 1520P).
- Low motor speed at 950 rpm ensures quiet condenser fan operation.

MULTIPLE COMPRESSOR (ACPSE Series 250P and above)

- By cycling off compressor operation to match building load, no energy is being wasted when room load requires lesser cooling capacity.
- No total shut down when servicing or repairing a faulty compressor.

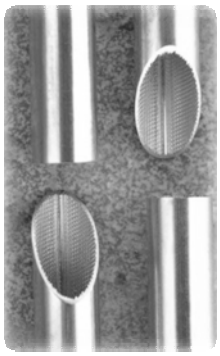

EFFICIENT CONDENSER COIL

- Staggered row of 3/8”OD inner groove tubes with 25 to 30% more surface area guarantee better heat transfer.
- Mechanically expanded into die-formed corrugated aluminum fins.
- Integral subcooling circuit to maximize efficiency.
- One or multiple thermal expansion valve promotes efficient cooling and superheat during reverse cycle
- Leak and pressure tested to 650 psig.

GENERAL DESCRIPTION

SAFETY CONTROL

- High-low pressure cutout to protect compressor from high discharge pressure and system leakage.

FULLY LEAK TESTED REFRIGERANT CIRCUIT

- Compressors, condenser coil, filter drier, sightglass, thermo-expansion valve, distributor and evaporator coil is brazed in complete sealed loop.
- Leak and pressure tested at 650 psig.
- Pressure ports are provided on the discharge, liquid and suction line.
- Evacuated, dehydrated and charge with refrigerant gas prior to shipment.

CASING

- Constructed from heavy gauge galvanized steel.
- Panels are painted with epoxy powder paint for excellent finish, weatherability and corrosion resistance.
- Evaporator section is insulated with 1 x 1 1/2 lb per.cu.ft of linacoustic fibreglass.

EFFICIENT EVAPORATOR COIL

- Independent thermal expansion valve with external equalizer for better refrigerant control and wider load condition.
- Leak and pressure tested to 650 psig
- Evacuated, dehydrated and charged with refrigerant gas.

DRIVE PACKAGE AND BLOWERS

- Belt driven drive package offers flexibility on various air flow rate and various static pressure applications (ACPSE Series 160P and above).
- Single large diameter double inlet double width blowers (AMCA certified) reduce the noise level and eliminates the need for common transition and eliminates air unbalance.

FILTERS

- 1” thick with side loading for ACPSE Series 40P to 145P.
- 2” thick with side loading for ACPSE Series 160P and above

OPTIONAL ACCESSORIES

- Factory wired starters
  - DOL for compressors and fan motors.
  - Auto-transformer for compressors.
- Suction stop valve(s), discharge stop valve(s) and liquid stop valve(s).
- Fan staging (ACPSE Series 160P and above) of multiple fans for head pressure control.
- Thermostat.
- Hydrophilic fins or copper fins for better corrosion resistance.
- Hot gas by pass for low load and low ambient conditions.
- Hot water heating coils.
- Electric heaters.

COOLING & HEATING PORTFOLIO

Reference		Hz	Capacity	
			MBH	kW
ACPSE 40P	Cooling	50/60	36.2	10.6
	Heating	50/60	39.8	11.7
ACPSE 50P	Cooling	50/60	43.8	12.8
	Heating	50/60	49.6	14.5
ACPSE 68P	Cooling	50/60	60.0	17.6
	Heating	50/60	63.9	18.7
ACPSE 81P	Cooling	50/60	71.0	20.8
	Heating	50/60	78.2	22.9
ACPSE 95P	Cooling	50/60	80.2	23.5
	Heating	50/60	87.3	25.6
ACPSE 108P	Cooling	50/60	98.7	28.9
	Heating	50/60	104.4	30.6
ACPSE 125P	Cooling	50/60	98.7	28.9
	Heating	50/60	116.3	34.1
ACPSE 145P	Cooling	50/60	128.3	37.6
	Heating	50/60	133.3	39.1
ACPSE 160P	Cooling	50/60	144.0	42.2
	Heating	50/60	152.3	44.6
ACPSE 190P	Cooling	50/60	168.3	49.3
	Heating	50/60	165.1	48.4
ACPSE 220P	Cooling	50/60	193.4	56.7
	Heating	50/60	206.2	60.4
ACPSE 250P	Cooling	50/60	223.8	65.6
	Heating	50/60	234.9	68.8
ACPSE 290P	Cooling	50/60	247.9	72.6
	Heating	50/60	269.6	79.0
ACPSE 320P	Cooling	50/60	290.4	85.1
	Heating	50/60	310.6	91.0
ACPSE 380P	Cooling	50/60	334.8	98.1
	Heating	50/60	350.0	102.6
ACPSE 435P	Cooling	50/60	388.1	113.7
	Heating	50/60	404.6	118.5
ACPSE 480P	Cooling	50/60	416.8	122.1
	Heating	50/60	445.0	130.4
ACPSE 510P	Cooling	50/60	445.8	130.6
	Heating	50/60	477.6	139.9
ACPSE 570P	Cooling	50/60	497.5	145.8
	Heating	50/60	522.3	153.0
ACPSE 640P	Cooling	50/60	561.5	164.5
	Heating	50/60	580.6	170.1
ACPSE 700P	Cooling	50/60	606.8	177.8
	Heating	50/60	648.1	189.9
ACPSE 760P	Cooling	50/60	663.7	194.5
	Heating	50/60	681.1	199.6
ACPSE 800P	Cooling	50/60	738.4	216.4
	Heating	50/60	760.4	222.8
ACPSE 890P	Cooling	50/60	820.9	240.5
	Heating	50/60	838.1	245.6
ACPSE 960P	Cooling	50/60	883.8	259.0
	Heating	50/60	906.0	265.5
ACPSE 1020P	Cooling	50/60	958.1	280.7
	Heating	50/60	933.9	273.6
ACPSE 1140P	Cooling	50/60	1046.0	306.5
	Heating	50/60	1034.6	303.1
ACPSE 1340P	Cooling	50/60	1250.1	366.3
	Heating	50/60	1197.3	350.8
ACPSE 1520P	Cooling	50/60	1387.7	406.6
	Heating	50/60	1297.8	380.3

Notes: 1) Ratings Are Gross Capacities - For Net Capacities, Deduct Evaporator Blower Motor Heat.
2) Cooling Mode: At 80 °F (DB), 67 °F (WB) Air on Evaporator And 95°F Ambient Air Temperature on Condenser.
3) Heating Mode: At 70 °F (DB) Air on Evaporator And 45°F Ambient Air Temperature on Condenser.
4) Model ACPSE 40P & 50P are not offered for installation in US region.

PHYSICAL SPECIFICATIONS

50 Hz

Model ACPSE	Comp.	Condenser Coil			Condenser Fan Motor HP (Qty)	Evaporator Blower			Evaporator Coil		Air Filter	R410A Charge		Approx. Unit Weight lbs	Sound Pressure Level ±2 dB(A)
	Qty	Face Area ft²	Row/ FPI			Standard Size (Qty)	Mtr. Max HP (Qty)	Fan Min-Max Cfm	Face Area ft²	Row/ FPI	Size Inches (Qty)	Lbs Per System (Qty)			
			Cooling Only	Heat Pump								Cooling Only	Heat Pump		
40P	1	7.2	2/16	3/12	1/5(1)	241-181 (1)	0.4(1)	920 1800	3.1	3/12	20x25x1(1)	5.6(1)	8.4(1)	600	62
50P	1	8.3	2/14	3/12	1/5(1)	241-241 (1)	0.4(1)	1100 2200	3.7	3/12	20x25x1(1)	6.4(1)	9.7(1)	650	62
68P	1	8.3	2/12	2/12	5/8(1)	270-270 (1)	1.0(1)	1400 2800	4.7	3/12	16x25x1(1) 20x25x1(1)	6.6(1)	6.9(1)	1100	66
81P	1	9.4	2/14	3/12	5/8(1)	270-270 (1)	1.0(1)	1550 3100	5.2	3/12	16x25x1(1) 20x25x1(1)	7.5(1)	11.1(1)	1200	66
95P	1	10.9	2/16	3/12	5/8(1)	270-270 (1)	1.0(1)	1550 3100	5.2	4/12	16x25x1(1) 20x25x1(1)	8.6(1)	13.2(1)	1300	66
108P	1	14.2	2/16	3/12	5/8(1)	270-270 (2)	1.0(2)	1850 3600	6.1	4/12	20x25x1(2)	11.0(1)	16.9(1)	1500	66
125P	1	14.2	3/14	3/12	5/8(1)	270-270 (2)	1.0(2)	2000 3900	6.6	4/12	20x25x1(2)	16.0(1)	19.2(1)	1600	67
145P	1	16.3	3/16	3/12	5/8(1)	270-270 (2)	1.0(2)	2600 5100	8.5	4/12	20x25x1(2)	18.6(1)	22.7(1)	1750	67
160P	1	19.5	2/16	3/12	5/8(2)	15x15 (1)	4.0(1)	3500 7000	11.7	3/12	20x20x2(2) 20x25x2(2)	15.2(1)	23.0(1)	1700	69
190P	1	19.5	3/12	3/12	5/8(2)	15x15 (1)	4.0(1)	3500 7000	11.7	4/12	20x20x2(2) 20x25x2(2)	22.3(1)	23.4(1)	1800	70
220P	2	19.5	3/16	4/12	5/8(2)	15x15 (1)	5.5(1)	3700 7300	12.3	4/12	20x20x2(2) 20x25x2(2)	11.3(2)	15.5(2)	1900	69
250P	2	27.4	3/16	4/12	5/8(2)	18x13 (1)	5.5(1)	4400 8700	14.6	4/12	25x25x2(4)	15.5(2)	21.4(2)	2100	71
290P	2	27.4	4/16	5/12	5/8(2)	18x13 (1)	7.5(1)	5000 10000	16.7	4/12	25x25x2(4)	20.6(2)	26.5(2)	2400	71
320P	2	37.5	3/14	4/12	5/8(3)	18x18 (1)	7.5(1)	5850 11600	19.4	4/12	16x25x2(2) 20x25x2(4)	21.2(2)	29.0(2)	2900	71
380P	2	37.5	4/14	5/12	5/8(3)	18x18 (1)	10.0(1)	6700 13400	22.6	4/12	16x20x2(3) 20x20x2(6)	27.9(2)	35.9(2)	3000	72
435P	3	40.0	4/16	5/12	5/8(3)	450x450 (1)	15.0(1)	7000 14000	23.3	4/12	16x20x2(3) 20x20x2(6)	20.0(3)	25.8(2)	3100	72
480P	3	48.3	3/14	4/12	5/8(4)	500x500 (1)	10.0(1)	8900 17900	29.7	3/12	20x20x2(2) 20x25x2(5) 25x25x2(2)	18.3(3)	24.9(2)	4000	73
510P	3	48.3	3/16	4/12	5/8(4)	500x500 (1)	15.0(1)	8900 17900	29.7	3/16	20x20x2(2) 20x25x2(5) 25x25x2(2)	17.9(2) 19.0(1)	23.2(2) 28.3(1)	4300	73
570P	3	48.3	4/14	5/12	5/8(4)	500x500 (1)	20.0(1)	8900 17900	29.7	4/14	20x20x2(2) 20x25x2(5) 25x25x2(2)	24.1(3)	30.5(3)	4400	74
640P	4	65.3	3/12	3/12	1 1/2(4)	560x560 (1)	15.0(1)	10000 20000	33.4	4/10	20x20x2(4) 20x25x2(8)	38.8(2)	40.7(2)	6500	79
700P	4	65.3	3/14	4/12	1 1/2(4)	560x560 (1)	20.0(1)	10000 20000	33.4	4/14	20x20x2(4) 20x25x2(8)	36.3(1) 41.3(1)	48.8(1) 55.9(1)	6650	79
760P	4	65.3	4/12	4/12	1 1/2(4)	560x560 (1)	20.0(1)	10400 20800	34.7	4/14	20x20x2(4) 20x25x2(8)	50.2(2)	52.6(2)	6750	79
800P	5	94.0	3/16	4/12	1 1/2(4)	630x630 (1)	20.0(1)	13500 27000	45.1	4/14	20x20x2(4) 20x25x2(9) 25x25x2(2)	43.1(2) 24.0(1)	58.2(2) 32.6(1)	7000	79
890P	5	94.0	4/14	5/12	1 1/2(4)	630x630 (1)	20.0(1)	14000 28000	46.9	4/14	20x20x2(4) 20x25x2(9) 25x25x2(2)	53.6(1) 59.7(1) 29.5(1)	65.4(1) 77.8(1) 40.3(1)	7100	79
960P	6	94.0	4/16	5/12	1 1/2(4)	630x630 (1)	25.0(1)	14500 29000	48.6	4/14	20x20x2(4) 20x25x2(9) 25x25x2(2)	48.0(3)	61.6(3)	7250	79
1020P	6	123.0	3/16	4/12	1 1/2(6)	710x710 (1)	25.0(1)	16600 33300	55.6	4/12	20x20x2(12) 20x25x2(8)	43.0(2) 53.2(1)	59.4(2) 74.8(1)	8350	81
1140P	6	123.0	4/14	5/12	1 1/2(6)	710x710 (1)	25.0(1)	19000 38300	63.9	4/12	20x25x2(20)	62.5(3)	80.1(3)	9400	81
1340P	8	129.0	4/16	5/12	1 1/2(6)	800x800 (1)	30.0(1)	21600 43300	72.2	4/12	20x20x2(8) 20x25x2(16)	46.9(3) 60.2(1)	63.6(3) 66.0(1)	10400	81
1520P	8	129.0	4/16	5/12	1 1/2(6)	800x800 (1)	40.0(1)	21600 43300	72.2	5/12	20x20x2(8) 20x25x2(16)	51.1(4)	65.1(1)	11000	82

Notes:
1) Evaporator blower motor for 40P to 145P is 220/240-1-50Hz and direct drive.
2) Condenser fan motors voltage is 220/240-1-50Hz for model 40P to 50P.
3) Sound Pressure Level is calculated based on nominal airflow at external static pressure of 0.5" WG (Model 40-145) / 1.5 WG (Model 160-1520), 3m (9.8ft) distance away from unit at free field. Unit supply and return are assumed to be entirely insulated. The actual sound at field could be affected by the supply and return duct break out noise.
4) Minimum-maximum voltage is 380V to 440V.

PHYSICAL SPECIFICATIONS

60 Hz

Model 6ACPSE	Comp.	Condenser Coil			Condenser Fan Motor HP (Qty)	Evaporator Blower			Evaporator Coil		Air Filter	R410A Charge		Approx. Unit Weight	Sound Pressure Level
	Qty	Face Area ft²	Row/ FPI			Standard Size (Qty)	Mtr. Max HP	Fan Min-Max Cfm	Face Area ft²	Row/ FPI	Size Inches (Qty)	Lbs Per System (Qty)		lbs	±2 dB(A)
			Cooling Only	Heat Pump								Cooling Only	Heat Pump		
40P	1	7.2	2/16	3/12	1/5 (1)	DD9/9 (1)	0.6(1)	920 1800	3.1	3/12	20x25x1 (1)	3.7(1)	5.5(1)	600	62
50P	1	8.3	2/14	3/12	1/5 (1)	DD9/9 (1)	1.0(1)	1100 2200	3.7	3/12	20x25x1 (1)	5.6(1)	8.4(1)	650	62
68P	1	8.3	2/12	2/12	5/8 (1)	DD9/9 (1)	1.0(1)	1400 2800	4.7	3/12	16x25x1 (1) 20x25x1 (1)	6.4(1)	9.7(1)	1100	66
81P	1	9.4	2/14	3/12	5/8 (1)	DD9/9 (2)	0.6(2)	1550 3100	5.2	3/12	16x25x1 (1) 20x25x1 (1)	6.6(1)	6.9(1)	1200	66
95P	1	10.9	2/16	3/12	5/8 (1)	DD9/9 (2)	0.6(2)	1550 3100	5.2	4/12	16x25x1(1) 20x25x1 (1)	7.5(1)	11.1(1)	1300	66
108P	1	14.2	2/16	3/12	5/8 (1)	DD9/9 (2)	1.0(2)	1850 3600	6.1	4/12	20x25x1 (2)	8.6(1)	13.2(1)	1500	66
125P	1	14.2	3/14	3/12	5/8 (1)	DD9/9 (2)	1.0(2)	2000 3900	6.6	4/12	20x25x1 (2)	11.0(1)	16.9(1)	1600	67
145P	1	16.3	3/16	3/12	5/8 (1)	DD9/9 (2)	1.0(2)	2600 5100	8.5	4/12	20x25x1 (2)	16.0(1)	19.2(1)	1750	67
160P	1	19.5	2/16	3/12	5/8 (2)	15x15 (1)	4.0(1)	3500 7000	11.7	3/12	20x20x2 (2) 20x25x2 (2)	18.6(1)	22.7(1)	1700	69
190P	1	19.5	3/12	3/12	5/8 (2)	15x15 (1)	4.0(1)	3500 7000	11.7	4/12	20x20x2 (2) 20x25x2 (2)	15.2(1)	23.0(1)	1800	70
220P	1	19.5	3/16	4/12	5/8 (2)	15x15 (1)	5.5(1)	3700 7300	12.3	4/12	20x20x2 (2) 20x25x2 (2)	22.3(1)	23.4(1)	1900	69
250P	2	27.4	3/16	4/12	5/8 (2)	18x13 (1)	5.5(1)	4400 8700	14.6	4/12	25x25x2 (4)	11.3(2)	15.5(2)	2100	71
290P	2	27.4	4/16	5/12	5/8 (2)	18x13 (1)	7.5(1)	5000 10000	16.7	4/12	25x25x2 (4)	15.5(2)	21.4(2)	2400	71
320P	2	37.5	3/14	4/12	5/8 (3)	18x18 (1)	7.5(1)	5850 11600	19.4	4/12	16x25x2 (2) 20x25x2(4)	20.6(2)	26.5(2)	2900	71
380P	2	37.5	4/14	5/12	5/8 (3)	18x18 (1)	10.0(1)	6700 13400	22.6	4/12	16x20x2 (3) 20x20x2 (6)	21.2(2)	29.0(2)	3000	72
435P	2	40.0	4/16	5/12	5/8 (3)	450x450 (1)	15.0(1)	7000 14000	23.3	4/12	16x20x2 (3) 20x20x2 (6)	27.9(2)	35.9(2)	3100	72
480P	3	48.3	3/14	4/12	5/8 (4)	500x500 (1)	10.0(1)	8900 17900	29.7	3/12	20x20x2 (2) 20x25x2 (5) 25x25x2 (2)	20.0(3)	25.8(3)	4000	73
510P	3	48.3	3/16	4/12	5/8 (4)	500x500 (1)	15.0(1)	8900 17900	29.7	3/16	20x20x2 (2) 20x25x2 (5) 25x25x2 (2)	18.3(3)	24.9(3)	4300	73
570P	3	48.3	4/16	5/12	5/8 (4)	500x500 (1)	20.0(1)	8900 17900	29.7	4/14	20x20x2 (2) 20x25x2 (5) 25x25x2 (2)	17.9(2) 19.0(1)	23.2(2) 28.3(1)	4400	74
640P	3	65.3	3/12	3/12	1 1/2 (4)	560x560 (1)	15.0(1)	10000 20000	33.4	4/10	20x20x2 (4) 20x25x2 (8)	24.1(3)	30.5(3)	6500	79
700P	4	65.3	3/14	4/12	1 1/2 (4)	560x560 (1)	20.0(1)	10000 20000	33.4	4/14	20x20x2 (4) 20x25x2 (8)	38.8(2)	40.7(2)	6650	79
760P	4	65.3	4/12	4/12	1 1/2 (4)	560x560 (1)	20.0(1)	10400 20800	34.7	4/14	20x20x2 (4) 20x25x2 (8)	36.3(1) 41.3(1)	48.8(1) 55.9(1)	6750	79
800P	4	94.0	3/16	4/12	1 1/2 (4)	630x630 (1)	20.0(1)	13500 27000	45.1	4/14	20x20x2 (4) 20x25x2 (9) 25x25x2 (2)	50.2(2)	52.6(2)	7000	79
890P	5	94.0	4/14	5/12	1 1/2 (4)	630x630 (1)	20.0(1)	14000 28000	46.9	4/14	20x20x2 (4) 20x25x2 (9) 25x25x2 (2)	43.1(2) 24.0(1)	58.2(2) 32.6(1)	7100	79
960P	6	94.0	4/16	5/12	1 1/2 (4)	630x630 (1)	25.0(1)	14500 29000	48.6	4/14	20x20x2 (4) 20x25x2 (9) 25x25x2 (2)	53.6(1) 59.7(1) 29.5(1)	65.4(1) 77.8(1) 40.3(1)	7250	79
1020P	6	123.0	3/16	4/12	1 1/2 (6)	710x710 (1)	25.0(1)	16600 33300	55.6	4/12	20x20x2(12) 20x25x2 (8)	48.0(3)	61.6(3)	8350	81
1140P	6	123.0	4/14	5/12	1 1/2 (6)	710x710	25.0(1)	19000 38300	63.9	4/12	20x25x2(20)	43.0(2) 53.2(1)	59.4(2) 74.8(1)	9400	81
1340P	8	129.0	4/16	5/12	1 1/2 (6)	800x800 (1)	30.0(1)	21600 43300	72.2	4/12	20x20x2 (8) 20x25x2(16)	46.9(3) 43.0(1)	63.6(3) 59.4(1)	10400	81
1520P	8	129.0	4/16	5/12	1 1/2 (6)	800x800 (1)	40.0(1)	21600 43300	72.2	5/12	20x20x2 (8) 20x25x2(16)	46.9(3) 60.2(1)	63.6(3) 66.0(1)	11000	82

Notes:
1) Evaporator Blower motor for 6ACPRE 40P to 6ACPSE 145P is 220/240-1-60Hz and direct drive.
2) Condenser fan motors voltage is 220/240-1-60Hz for model 40P to 50P.
3) Sound Pressure Level is calculated based on nominal airflow at external static pressure of 0.5" WG (Model 40-145) / 1.5 WG (Model 160-1520), 3m (9.8ft) distance away from unit at free field.Unit supply and return are assumed to be entirely insulated. The actual sound at field could be affected by the supply and return duct break out noise.
4) Model ACPSE 40P & 50P are not offered for installation in US region.

SYSTEM COOLING CAPACITY

PERFORMANCE DATA – COOLING ONLY

Model ACPSE	EER	Std. Capacity MBH	Air On Evap.			Cooling Capacity @ Ambient Air Temperature On Condenser														
			CFM	WB Temp		95ºF [35ºC]					105ºF [41ºC]					115ºF [46ºC]				
						Total		Sensible		kW Input	Total		Sensible		kW Input	Total		Sensible		kW Input
				°F	°C	MBH	kW	MBH	kW		MBH	kW	MBH	kW		MBH	kW	MBH	kW	
40P	9.1	36.2	1400	72	22.2	39.7	11.6	20.7	6.1	3.59	38.2	11.2	20.7	6.1	4.14	36.5	10.7	19.7	5.8	4.69
				67	19.4	36.2	10.6	27.0	7.9	3.52	34.7	10.2	26.5	7.8	4.06	33.2	9.7	25.6	7.5	4.67
				62	16.7	34.2	10.0	33.1	9.7	3.46	33.1	9.7	33.1	9.7	3.93	31.0	9.1	31.0	9.1	4.57
50P	10.0	43.8	1600	72	22.2	50.1	14.7	25.4	7.4	3.82	48.1	14.1	24.8	7.3	4.39	46.0	13.5	24.3	7.1	4.98
				67	19.4	43.8	12.8	31.5	9.2	3.91	41.9	12.3	31.0	9.1	4.37	40.0	11.7	30.5	8.9	5.01
				62	16.7	42.6	12.5	39.5	11.6	3.74	39.2	11.5	38.0	11.1	4.28	37.8	11.1	37.8	11.1	4.85
68P	9.9	60.0	2000	72	22.2	65.3	19.1	32.4	9.5	5.12	63.0	18.5	31.7	9.3	5.68	57.7	16.9	30.4	8.9	6.36
				67	19.4	60.0	17.6	42.0	12.3	5.02	57.9	17.0	40.7	11.9	5.64	52.7	15.4	38.8	11.4	6.24
				62	16.7	55.4	16.2	50.7	14.9	4.92	51.0	14.9	48.8	14.3	5.52	49.4	14.5	48.2	14.1	6.12
81P	9.8	71.0	2400	72	22.2	77.4	22.7	38.7	11.3	6.12	74.5	21.8	37.9	11.1	6.72	67.8	19.9	35.4	10.4	7.44
				67	19.4	71.0	20.8	49.3	14.4	6.02	68.3	20.0	48.5	14.2	6.61	62.2	18.2	46.2	13.5	7.32
				62	16.7	65.4	19.2	59.6	17.5	5.92	63.1	18.5	58.9	17.3	6.56	58.2	17.1	56.7	16.6	7.19
95P	10.0	80.2	2600	72	22.2	87.0	25.5	44.7	13.1	6.99	83.3	24.4	43.8	12.8	7.75	79.8	23.4	42.0	12.3	8.62
				67	19.4	80.2	23.5	57.3	16.8	6.81	76.9	22.5	56.5	16.6	7.64	73.6	21.6	55.7	16.3	8.50
				62	16.7	74.7	21.9	70.4	20.6	6.63	72.0	21.1	69.6	20.4	7.35	66.6	19.5	66.6	19.5	8.28
108P	10.1	98.7	3200	72	22.2	107.2	31.4	55.0	16.1	8.30	102.5	30.0	53.9	15.8	9.15	92.2	27.0	50.5	14.8	10.26
				67	19.4	98.7	28.9	70.4	20.6	8.06	94.5	27.7	69.4	20.3	9.00	85.0	24.9	66.3	19.4	9.98
				62	16.7	91.8	26.9	86.4	25.3	7.83	88.4	25.9	85.5	25.1	8.75	81.6	23.9	81.6	23.9	9.71
125P	10.1	107.4	3500	72	22.2	123.6	36.2	62.5	18.3	9.10	111.4	32.7	58.9	17.3	10.20	106.4	31.2	56.4	16.5	11.33
				67	19.4	107.4	31.5	76.9	22.5	8.96	102.8	30.1	75.8	22.2	10.05	98.2	28.8	73.5	21.5	11.30
				62	16.7	99.8	29.3	94.4	27.7	8.72	96.2	28.2	92.3	27.1	9.68	88.8	26.0	88.8	26.0	10.89
145P	10.1	128.3	4000	72	22.2	140.3	41.1	71.9	21.1	10.55	134.4	39.4	69.1	20.3	11.85	119.9	35.1	64.9	19.0	13.50
				67	19.4	128.3	37.6	91.2	26.7	10.28	122.3	35.8	88.6	26.0	11.54	116.3	34.1	86.0	25.2	12.83
				62	16.7	119.3	35.0	111.3	32.6	10.01	109.2	32.0	106.5	31.2	11.25	105.3	30.9	105.3	30.9	12.66
160P	10.4	144.0	4600	72	22.2	157.6	46.2	78.2	22.9	11.60	143.7	42.1	73.4	21.5	13.09	137.7	40.4	71.8	21.0	14.65
				67	19.4	144.0	42.2	98.8	29.0	11.44	139.1	40.8	97.3	28.5	12.77	126.3	37.0	91.4	26.8	14.30
				62	16.7	132.6	38.9	118.9	34.8	11.15	122.2	35.8	114.7	33.6	12.46	117.7	34.5	113.3	33.2	14.13
190P	10.4	168.3	4800	72	22.2	175.2	51.4	88.5	25.9	13.60	168.1	49.3	86.8	25.4	15.02	160.5	47.0	83.5	24.5	16.67
				67	19.4	168.3	49.3	115.1	33.7	13.05	152.9	44.8	110.4	32.4	14.59	147.2	43.1	107.3	31.4	16.37
				62	16.7	155.5	45.6	139.3	40.8	12.67	143.1	41.9	134.9	39.5	14.16	137.6	40.3	132.0	38.7	15.89
220P	9.6	193.4	5400	72	22.2	212.4	62.3	104.8	30.7	16.72	204.6	60.0	102.9	30.2	18.67	186.0	54.5	95.5	28.0	20.96
				67	19.4	193.4	56.7	130.7	38.3	16.24	186.1	54.5	127.2	37.3	18.16	170.7	50.0	121.9	35.7	20.16
				62	16.7	178.3	52.3	157.6	46.2	15.78	172.1	50.4	154.3	45.2	17.65	158.5	46.5	149.4	43.8	19.85
250P	10.3	223.8	6400	72	22.2	243.6	71.4	122.0	35.8	17.99	233.7	68.5	117.6	34.5	20.16	211.2	61.9	110.9	32.5	22.65
				67	19.4	223.8	65.6	152.9	44.8	17.71	214.4	62.8	150.8	44.2	19.63	194.0	56.9	142.5	41.8	22.00
				62	16.7	205.8	60.3	184.9	54.2	17.24	197.6	57.9	181.0	53.1	19.11	181.2	53.1	175.2	51.4	21.51
290P	9.8	247.9	7500	72	22.2	270.4	79.3	137.6	40.3	21.11	258.5	75.8	132.4	38.8	23.43	246.7	72.3	129.8	38.0	26.04
				67	19.4	247.9	72.7	174.0	51.0	20.33	237.2	69.5	169.1	49.6	22.82	226.2	66.3	166.7	48.9	25.37
				62	16.7	229.1	67.1	211.7	62.0	19.80	220.0	64.5	207.1	60.7	22.22	211.0	61.8	204.9	60.1	24.70
320P	10.4	290.4	8000	72	22.2	316.0	92.6	155.8	45.7	22.66	302.3	88.6	153.0	44.8	25.24	272.9	80.0	141.9	41.6	28.56
				67	19.4	290.4	85.1	197.0	57.7	22.34	277.7	81.4	191.8	56.2	24.92	264.7	77.6	186.7	54.7	27.88
				62	16.7	264.1	77.4	234.6	68.8	21.78	253.1	74.2	229.7	67.3	24.31	231.3	67.8	220.0	64.5	27.55
380P	10.3	334.8	9200	72	22.2	364.8	106.9	179.2	52.5	26.31	348.9	102.3	176.0	51.6	29.02	315.0	92.3	163.3	47.9	32.58
				67	19.4	334.8	98.1	226.7	66.4	25.55	320.2	93.9	220.7	64.7	28.49	305.2	89.5	214.8	63.0	31.58
				62	16.7	304.6	89.3	269.9	79.1	24.82	291.9	85.6	264.3	77.5	27.67	279.2	81.8	258.7	75.8	30.66

Notes: 1) Ratings are based on 80°F [27°C] air on evaporator dry bulb temperature.
2) Ratings are gross capacities. For net capacity deduct evaporator blower motor heat.
3) kW input shown in the table is total compressor(s) power input.
4) Model ACPSE 40P & 50P are not offered for installation in US region.

SYSTEM COOLING CAPACITY

PERFORMANCE DATA – COOLING ONLY

Model ACPSE	EER	Std. Capacity MBH	Air On Evap.			Cooling Capacity @ Ambient Air Temperature On Condenser														
			CFM	WB Temp		95ºF [35ºC]					105ºF [41ºC]					115ºF [46ºC]				
						Total		Sensible		kW Input	Total		Sensible		kW Input	Total		Sensible		kW Input
				°F	°C	MBH	kW	MBH	kW		MBH	kW	MBH	kW		MBH	kW	MBH	kW	
435P	9.8	388.1	11500	72	22.2	422.9	124.0	210.1	61.6	32.00	404.1	118.4	206.1	60.4	35.53	364.8	106.9	194.2	56.9	40.00
				67	19.4	388.1	113.8	269.0	78.8	30.82	371.1	108.8	261.5	76.6	34.50	353.7	103.7	254.0	74.4	39.00
				62	16.7	356.7	104.5	325.9	95.5	30.36	341.9	100.2	318.9	93.5	33.70	313.3	91.8	305.0	89.4	37.94
480P	9.4	416.8	12000	72	22.2	458.6	134.4	220.3	64.6	35.61	420.2	123.2	207.9	60.9	40.26	404.0	118.4	203.7	59.7	45.08
				67	19.4	416.8	122.2	272.9	80.0	34.80	401.6	117.7	269.0	78.8	38.80	369.4	108.3	253.4	74.3	44.10
				62	16.7	379.8	111.3	323.9	94.9	33.86	366.0	107.3	320.3	93.9	37.86	336.9	98.7	305.7	89.6	42.98
510P	9.0	445.8	14000	72	22.2	489.6	143.5	249.9	73.2	37.77	464.1	136.0	240.3	70.4	42.01	444.7	130.3	235.4	69.0	47.47
				67	19.4	445.8	130.7	316.8	92.9	36.70	428.9	125.7	307.7	90.2	41.50	409.5	120.0	298.6	87.5	46.40
				62	16.7	414.1	121.4	386.2	113.2	35.81	398.5	116.8	377.7	110.7	39.85	366.9	107.5	364.9	107.0	45.07
570P	9.3	497.5	15000	72	22.2	546.0	160.0	278.5	81.6	41.68	522.0	153.0	268.1	78.6	46.10	498.2	146.0	263.0	77.1	51.81
				67	19.4	497.5	145.8	353.3	103.6	40.50	479.8	140.6	348.4	102.1	45.30	455.6	133.5	338.7	99.3	50.40
				62	16.7	464.1	136.0	430.7	126.2	39.31	446.3	130.8	426.2	124.9	43.45	410.7	120.4	408.0	119.6	48.88
640P	9.2	561.5	16000	72	22.2	614.6	180.1	306.6	89.9	46.36	563.3	165.1	290.0	85.0	52.37	540.7	158.5	284.5	83.4	58.60
				67	19.4	561.5	164.6	384.7	112.8	45.60	518.7	152.0	369.1	108.2	51.20	498.5	146.1	363.9	106.7	58.00
				62	16.7	522.0	153.0	470.5	137.9	44.07	482.9	141.5	451.1	132.2	49.85	446.2	130.8	436.5	127.9	56.54
700P	9.4	606.8	17200	72	22.2	661.4	193.9	339.9	99.6	50.34	633.4	185.6	328.0	96.1	55.86	605.3	177.4	322.1	94.4	62.21
				67	19.4	606.8	177.9	436.0	127.8	49.00	582.4	170.7	424.8	124.5	54.40	553.9	162.3	413.6	121.2	60.60
				62	16.7	570.8	167.3	529.1	155.1	47.66	549.8	161.1	523.9	153.6	52.90	507.9	148.9	503.0	147.4	59.68
760P	9.7	663.7	18000	72	22.2	724.1	212.2	368.1	107.9	53.65	658.6	193.0	343.2	100.6	60.01	628.9	184.3	337.0	98.8	66.60
				67	19.4	663.7	194.5	467.8	137.1	52.80	634.1	185.9	456.1	133.7	58.00	575.7	168.7	432.7	126.8	64.80
				62	16.7	620.2	181.8	564.5	165.5	50.60	573.2	168.0	542.6	159.0	56.57	529.8	155.3	526.2	154.2	63.58
800P	10.2	738.4	19600	72	22.2	808.5	237.0	409.3	120.0	58.69	733.3	214.9	382.2	112.0	66.28	694.5	203.6	368.7	108.1	74.14
				67	19.4	738.4	216.4	512.2	150.1	57.00	703.3	206.1	499.5	146.4	64.50	636.1	186.4	474.0	138.9	73.50
				62	16.7	685.0	200.8	624.5	183.0	55.78	628.7	184.3	600.7	176.1	63.09	599.7	175.8	588.7	172.5	71.56
890P	10.2	820.9	21000	72	22.2	859.4	251.9	431.0	126.3	63.08	817.0	239.5	416.5	122.1	70.69	776.3	227.5	409.2	119.9	78.66
				67	19.4	820.9	240.6	561.9	164.7	61.30	748.5	219.4	534.6	156.7	68.80	708.9	207.8	521.0	152.7	77.60
				62	16.7	728.1	213.4	662.0	194.0	59.66	696.8	204.2	649.2	190.3	66.88	665.8	195.1	636.5	186.6	74.44
960P	9.9	883.8	23000	72	22.2	965.9	283.1	487.4	142.9	71.26	925.5	271.3	471.4	138.2	79.54	838.8	245.9	439.6	128.8	90.12
				67	19.4	883.8	259.0	607.0	177.9	69.60	847.1	248.3	599.5	175.7	78.60	771.0	226.0	569.6	166.9	88.20
				62	16.7	820.9	240.6	737.6	216.2	67.75	756.7	221.8	709.7	208.0	76.66	726.4	212.9	695.7	203.9	85.90
1020P	10.3	958.1	25800	72	22.2	993.2	291.1	504.6	147.9	69.69	957.1	280.5	495.6	145.3	78.22	919.6	269.5	477.8	140.0	87.11
				67	19.4	958.1	280.8	662.0	194.0	67.80	875.9	256.7	628.5	184.2	76.40	840.7	246.4	611.8	179.3	85.89
				62	16.7	855.3	250.7	781.6	229.1	66.78	828.0	242.7	773.8	226.8	75.05	766.1	224.5	750.3	219.9	83.70
1140P	10.4	1046.0	26400	72	22.2	1090.1	319.5	545.5	159.9	77.15	1048.7	307.4	527.3	154.6	85.99	1006.0	294.9	518.1	151.9	95.26
				67	19.4	1046.0	306.6	706.1	207.0	75.00	955.6	280.1	663.3	194.4	83.40	916.6	268.7	654.7	191.9	93.60
				62	16.7	925.3	271.2	828.0	242.7	73.55	893.0	261.7	812.0	238.0	81.08	822.7	241.1	787.9	230.9	90.93
1340P	10.0	1250.1	32000	72	22.2	1367.4	400.8	671.0	196.7	98.30	1252.6	367.1	637.8	186.9	110.82	1198.5	351.3	615.7	180.5	123.80
				67	19.4	1250.1	366.4	843.4	247.2	95.80	1140.8	334.4	801.8	235.0	106.40	1092.8	320.3	781.0	228.9	120.80
				62	16.7	1108.8	325.0	991.0	290.5	93.32	1067.3	312.8	981.2	287.6	105.23	1025.8	300.7	961.8	281.9	117.64
1520P	9.7	1387.7	36000	72	22.2	1445.3	423.6	741.3	217.3	111.15	1378.4	404.0	716.4	210.0	122.92	1312.7	384.8	691.4	202.6	138.17
				67	19.4	1387.7	406.7	967.2	283.5	106.40	1259.1	369.0	908.7	266.3	119.20	1194.7	350.2	885.3	259.5	132.80
				62	16.7	1236.4	362.4	1140.2	334.2	103.71	1187.9	348.2	1118.3	327.8	115.86	1139.3	333.9	1096.5	321.4	128.66

Notes:
1) Ratings are based on 80°F [27°C] air on evaporator dry bulb temperature.
2) Ratings are gross capacities. For net capacity deduct evaporator blower motor heat.
3) kW input shown in the table is total compressor(s) power input.
4) Model ACPSE 40P & 50P are not offered for installation in US region.

SYSTEM HEATING CAPACITY

PERFORMANCE DATA – HEAT PUMP HEATING MODE

Model ACPSE	COP	Std. Capacity MBH	Air On Evap.			Heating Capacity @ Ambient Air Temperature On Condenser											
			CFM	Entering Air Temp DB		23ºF [-5ºC]			35ºF [1.7ºC]			45ºF [7.2ºC]			55ºF [12.8ºC]		
						Capacity		kW Input	Capacity		Kw Input	Capacity		kW Input	Capacity		kW Input
				°F	°C	MBH	kW		MBH	kW		MBH	kW		MBH	kW	
40P-HP	3.4	39.8	1400	60	15.6	27.5	8.1	2.20	31.2	9.1	2.30	37.8	11.1	2.50	44.4	13.0	2.70
				70	21.1	28.1	8.2	2.59	33.7	9.9	2.78	39.8	11.7	3.00	46.0	13.5	3.23
				80	26.7	28.4	8.3	3.00	34.0	10.0	3.21	38.9	11.4	3.41	44.7	13.1	3.65
50P-HP	3.6	49.6	1600	60	15.6	33.7	9.9	2.60	41.6	12.2	2.90	48.3	14.2	3.10	55.2	16.2	3.30
				70	21.1	35.5	10.4	3.09	42.6	12.5	3.32	49.6	14.5	3.57	57.4	16.8	3.86
				80	26.7	35.6	10.4	3.56	42.5	12.5	3.81	49.2	14.4	4.07	56.5	16.6	4.38
68P-HP	3.3	63.9	2000	60	15.6	44.7	13.1	3.50	53.1	15.6	3.80	63.0	18.5	3.90	73.0	21.4	4.40
				70	21.1	47.2	13.8	4.02	55.4	16.2	4.32	63.9	18.7	4.63	72.5	21.2	4.95
				80	26.7	46.4	13.6	4.47	54.8	16.1	4.82	62.8	18.4	5.14	71.2	20.9	5.49
81P-HP	3.3	78.2	2400	60	15.6	59.1	17.3	4.60	67.3	19.7	4.80	77.3	22.7	5.10	89.0	26.1	5.50
				70	21.1	58.4	17.1	5.02	69.4	20.3	5.41	78.2	22.9	5.71	88.4	25.9	6.06
				80	26.7	56.9	16.7	5.51	66.9	19.6	5.89	76.0	22.3	6.24	86.1	25.2	6.62
95P-HP	3.5	87.3	2600	60	15.6	62.8	18.4	4.60	75.0	22.0	5.00	87.1	25.5	5.40	97.3	28.5	5.80
				70	21.1	63.4	18.6	5.17	75.1	22.0	5.61	87.3	25.6	6.07	98.6	28.9	6.52
				80	26.7	62.2	18.2	5.75	73.3	21.5	6.20	84.5	24.8	6.68	96.4	28.3	7.20
108P-HP	3.5	104.4	3200	60	15.6	74.5	21.8	5.40	91.8	26.9	6.00	106.6	31.2	6.50	121.6	35.6	7.00
				70	21.1	75.4	22.1	6.07	87.0	25.5	6.48	104.4	30.6	7.09	119.4	35.0	7.68
				80	26.7	75.7	22.2	6.78	88.8	26.0	7.28	103.2	30.2	7.86	117.2	34.4	8.47
125P-HP	3.5	116.3	3500	60	15.6	83.8	24.6	6.10	99.9	29.3	6.60	116.0	34.0	7.10	132.4	38.8	7.70
				70	21.1	78.6	23.0	6.61	100.6	29.5	7.39	116.3	34.1	7.99	132.7	38.9	8.64
				80	26.7	82.9	24.3	7.56	99.0	29.0	8.22	111.2	32.6	8.75	127.6	37.4	9.46
145P-HP	3.4	133.3	4000	60	15.6	96.4	28.3	7.00	115.5	33.9	7.50	134.5	39.4	8.10	153.8	45.1	8.70
				70	21.1	97.5	28.6	7.79	115.7	33.9	8.40	133.3	39.1	9.02	152.5	44.7	9.74
				80	26.7	93.4	27.4	8.57	114.4	33.5	9.36	131.3	38.5	10.03	149.7	43.9	10.79
160P-HP	3.4	152.3	4600	60	15.6	107.0	31.4	7.90	126.9	37.2	8.50	147.1	43.1	9.20	167.4	49.1	9.90
				70	21.1	112.7	33.0	9.09	132.4	38.8	9.79	152.3	44.6	10.54	172.9	50.7	11.37
				80	26.7	110.4	32.4	10.18	131.1	38.4	11.01	149.6	43.8	11.79	169.0	49.5	12.65
190P-HP	3.3	165.1	4800	60	15.6	127.4	37.3	9.00	150.9	44.2	9.80	174.7	51.2	10.60	198.6	58.2	11.50
				70	21.1	125.7	36.8	9.91	150.5	44.1	10.82	165.1	48.4	11.42	193.0	56.6	12.49
				80	26.7	124.9	36.6	11.02	139.8	41.0	11.68	167.5	49.1	12.79	190.3	55.8	13.81
220P-HP	3.2	206.2	5400	60	15.6	171.5	50.3	14.20	197.9	58.0	15.40	224.4	65.8	16.60	255.5	74.9	18.00
				70	21.1	149.9	43.9	12.63	178.4	52.3	13.75	206.2	60.4	14.93	233.6	68.5	16.19
				80	26.7	145.1	42.5	13.93	176.7	51.8	15.30	203.1	59.5	16.55	229.7	67.3	17.91
250P-HP	3.4	234.9	6400	60	15.6	164.0	48.1	12.20	195.3	57.2	13.20	226.5	66.4	14.20	258.0	75.6	15.40
				70	21.1	169.6	49.7	13.70	204.5	59.9	15.05	234.9	68.8	16.26	269.2	78.9	17.68
				80	26.7	169.0	49.5	15.36	193.5	56.7	16.45	228.6	67.0	17.96	259.3	76.0	19.37
290P-HP	3.3	269.6	7500	60	15.6	196.8	57.7	14.20	233.0	68.3	15.40	269.6	79.0	16.60	306.3	89.8	18.00
				70	21.1	196.0	57.4	15.84	234.8	68.8	17.24	269.6	79.0	18.56	307.0	90.0	20.04
				80	26.7	194.8	57.1	17.68	228.1	66.9	19.04	261.6	76.7	20.46	296.7	87.0	22.02
320P-HP	3.4	310.6	8000	60	15.6	216.9	63.6	15.80	256.5	75.2	17.00	296.5	86.9	18.40	336.7	98.7	19.80
				70	21.1	226.0	66.2	18.11	270.5	79.3	19.70	310.6	91.0	21.23	350.8	102.8	22.88
				80	26.7	224.6	65.8	20.42	263.1	77.1	21.96	300.4	88.0	23.54	339.5	99.5	25.29
380P-HP	3.3	350.0	9200	60	15.6	249.8	73.2	18.00	295.4	86.6	19.60	341.5	100.1	21.20	387.8	113.7	23.00
				70	21.1	259.4	76.0	20.25	303.8	89.0	21.95	350.0	102.6	23.77	398.6	116.8	25.82
				80	26.7	254.0	74.4	22.36	300.6	88.1	24.32	344.4	100.9	26.27	389.4	114.1	28.41

Notes: 1) Ratings are gross capacities. For net capacity add evaporator blower motor heat.
2) kW input shown in the table is total compressor(s) power input.
3) Model ACPSE 40P & 50P are not offered for installation in US region.

SYSTEM HEATING CAPACITY

PERFORMANCE DATA – HEAT PUMP HEATING MODE

Model ACPSE	COP	Std. Capacity MBH	Air On Evap.			Heating Capacity @ Ambient Air Temperature On Condenser											
			CFM	Entering Air Temp DB		23ºF [-5ºC]			35ºF [1.7ºC]			45ºF [7.2ºC]			55ºF [12.8ºC]		
						Capacity		kW Input	Capacity		Kw Input	Capacity		kW Input	Capacity		kW Input
				°F	°C	MBH	kW		MBH	kW		MBH	kW		MBH	kW	
435P-HP	3.2	404.6	11500	60	15.6	295.4	86.6	21.30	349.6	102.5	23.10	404.5	118.6	24.90	459.6	134.7	27.00
				70	21.1	298.7	87.5	23.92	350.6	102.8	25.81	404.6	118.6	27.83	460.6	135.0	30.06
				80	26.7	292.3	85.7	26.52	346.9	101.7	28.76	397.1	116.4	30.89	451.7	132.4	33.32
480P-HP	3.0	445.0	12000	60	15.6	313.1	91.8	24.90	373.7	109.5	27.30	426.3	124.9	29.40	479.0	140.4	31.50
				70	21.1	311.2	91.2	27.97	392.4	115.0	31.42	445.0	130.4	33.86	506.2	148.4	36.88
				80	26.7	327.8	96.1	32.42	384.5	112.7	35.17	437.4	128.2	37.89	493.6	144.7	41.00
510P-HP	3.1	477.6	14000	60	15.6	369.5	108.3	26.90	436.6	128.0	29.10	504.7	147.9	31.50	573.2	168.0	33.90
				70	21.1	349.0	102.3	27.51	413.1	121.1	29.65	477.6	140.0	31.91	545.8	160.0	34.44
				80	26.7	343.6	100.7	30.72	407.6	119.5	33.11	458.4	134.4	35.09	530.4	155.5	38.04
570P-HP	3.2	522.3	15000	60	15.6	380.1	111.4	26.40	455.6	133.5	28.80	531.0	155.6	31.20	607.3	178.0	33.60
				70	21.1	376.0	110.2	29.13	454.0	133.1	31.79	522.3	153.1	34.22	595.9	174.7	36.96
				80	26.7	376.1	110.2	32.45	426.2	124.9	34.47	508.3	149.0	37.54	571.6	167.5	40.23
640P-HP	2.9	580.6	16000	60	15.6	420.1	123.1	32.80	492.8	144.4	35.20	566.5	166.0	38.00	640.6	187.8	41.20
				70	21.1	433.6	127.1	37.42	506.9	148.6	40.36	580.6	170.2	43.50	654.7	191.9	46.86
				80	26.7	425.4	124.7	41.98	497.4	145.8	45.22	566.7	166.1	48.48	624.4	183.0	51.37
700P-HP	3.2	648.1	17200	60	15.6	498.4	146.1	38.20	587.5	172.2	41.40	677.9	198.7	44.80	768.8	225.3	48.20
				70	21.1	477.3	139.9	38.00	559.4	164.0	40.91	648.1	190.0	44.15	740.3	217.0	47.75
				80	26.7	464.4	136.1	42.15	531.3	155.7	44.81	627.3	183.9	48.64	712.4	208.8	52.32
760P-HP	3.2	681.1	18000	60	15.6	506.9	148.6	36.00	600.1	175.9	39.20	694.8	203.6	42.80	789.9	231.5	46.00
				70	21.1	500.6	146.7	40.06	591.4	173.3	43.43	681.1	199.6	46.89	776.2	227.5	50.77
				80	26.7	491.8	144.1	44.30	572.9	167.9	47.65	659.4	193.3	51.34	746.9	218.9	55.34
800P-HP	3.4	760.4	19600	60	15.6	556.8	163.2	39.00	645.9	189.3	41.50	752.8	220.6	45.00	860.9	252.3	48.50
				70	21.1	558.2	163.6	44.02	658.1	192.9	47.25	760.4	222.9	50.74	868.5	254.6	54.68
				80	26.7	556.6	163.1	49.66	649.2	190.3	53.02	747.8	219.2	56.78	847.4	248.4	60.78
890P-HP	3.3	838.1	21000	60	15.6	651.3	190.9	49.20	765.2	224.3	53.40	880.4	258.0	57.80	996.1	292.0	62.50
				70	21.1	601.1	176.2	47.39	725.0	212.5	51.70	838.1	245.6	55.82	953.6	279.5	60.33
				80	26.7	605.1	177.4	53.19	717.4	210.3	57.57	807.3	236.6	61.26	921.5	270.1	66.16
960P-HP	3.2	906.0	23000	60	15.6	670.0	196.4	48.00	792.0	232.1	51.60	915.7	268.4	55.80	1040.0	304.8	60.00
				70	21.1	655.5	192.1	53.59	784.4	229.9	58.01	906.0	265.5	62.45	1032.2	302.5	67.37
				80	26.7	653.9	191.7	60.49	778.6	228.2	65.30	877.3	257.1	69.32	993.7	291.3	74.30
1020P-HP	3.0	933.9	25800	60	15.6	696.8	204.2	53.80	824.8	241.7	58.20	954.9	279.9	63.00	1085.6	318.2	67.80
				70	21.1	688.1	201.7	55.88	817.0	239.5	60.47	933.9	273.7	64.79	1066.6	312.6	70.02
				80	26.7	673.8	197.5	62.30	798.2	234.0	67.20	906.1	265.6	71.66	1026.4	300.8	76.90
1140P-HP	3.1	1034.6	26400	60	15.6	747.1	219.0	54.00	882.7	258.7	59.40	1020.2	299.0	64.20	1158.3	339.5	69.60
				70	21.1	760.5	222.9	60.85	897.2	263.0	66.08	1034.6	303.2	71.57	1172.7	343.7	77.50
				80	26.7	744.9	218.3	67.21	874.5	256.3	72.68	998.0	292.5	78.23	1134.4	332.5	84.70
1340P-HP	3.1	1197.3	32000	60	15.6	924.6	271.0	70.60	1087.2	318.7	76.00	1252.0	367.0	82.40	1417.5	415.5	88.60
				70	21.1	872.1	255.6	73.28	1035.6	303.5	79.20	1197.3	350.9	85.38	1365.2	400.1	92.23
				80	26.7	861.7	252.6	82.11	1011.3	296.4	88.17	1161.7	340.5	94.58	1314.0	385.1	101.43
1520P-HP	3.0	1297.8	36000	60	15.6	945.1	277.0	68.80	1139.2	333.9	75.20	1300.5	381.2	80.80	1496.6	438.7	87.20
				70	21.1	957.3	280.6	77.01	1138.4	333.7	83.38	1297.8	380.4	89.15	1490.5	436.9	96.42
				80	26.7	941.4	275.9	85.26	1112.6	326.1	91.84	1258.7	368.9	97.74	1438.0	421.5	105.31

Notes: 1) Ratings are gross capacities. For net capacity add evaporator blower motor heat.
2) kW input shown in the table is total compressor(s) power input.
3) Model ACPSE 40P & 50P are not offered for installation in US region.

BLOWER PERFORMANCE

EVAPORATOR

Model ACPSE	Airflow on Evaporator		Blower Size		External Static Pressure - in WG [Pa]							
			Standard (Qty)		0.5 [125]		1.0 [249]		1.5 [374]		2.0 [498]	
	CFM	m^3/h	50 Hz	60 Hz	RPM	Motor Hp (Qty)	RPM	Motor Hp (Qty)	RPM	Motor Hp	RPM	Motor Hp
40P	1,400	2,379	241-181	DD 9/9	1,300	315W	Not Applicable		Not Applicable		Not Applicable	
50P	1,600	2,718	241-241	DD 9/9	1,300	315W						
68P	2,000	3,398	270-270	DD 9/9	1,200	750W						
81P	2,400	4,078	270-270	DD 9/9 (2)	1,250	750W						
95P	2,600	4,417	270-270	DD 9/9 (2)	1,300	750W						
108P	3,200	5,437	270-270 (2)	DD 9/9 (2)	1,250	600W (2)	1,400*	750W (2)*				
125P	3,500	5,947	270-270 (2)	DD 9/9 (2)	1,300	600W (2)	1,400*	750W (2)*				
145P	4,000	6,796	270-270 (2)	DD 9/9 (2)	1,200	750W (2)	1,400*	750W (2)*				
160P	4,600	7,815	15-15	15x15			861	3.0	987	3.0	1,102	4.0
190P	4,800	8,155	15-15	15x15			888	3.0	1,010	4.0	1,122	4.0
220P	5,400	9,175	15-15	15x15			919	4.0	1,033	4.0	1,140	5.5
250P	6,400	10,874	18-13	18x13			767	4.0	849	5.5	934	5.5
290P	7,500	12,743	18-13	18x13			791	5.5	873	7.5	945	7.5
320P	8,000	13,592	18-18	18x18			753	5.5	848	7.5	931	7.5
380P	9,200	15,631	18-18	18x18			771	7.5	858	7.5	942	10.0
435P	11,500	19,539	450	450x450			790	10.0	865	10.0	935	15.0
480P	12,000	20,388	500	500x500			686	7.5	768	10.0	843	10.0
510P	14,000	23,786	500	500x500			761	15.0	832	15.0	901	15.0
570P	15,000	25,485	500	500x500			791	15.0	858	15.0	924	20.0
640P	16,000	27,184	560	560x560			640	10.0	706	15.0	769	15.0
700P	17,200	29,223	560	560x560			690	15.0	752	15.0	811	20.0
760P	18,000	30,582	560	560x560			710	15.0	770	20.0	827	20.0
800P	19,600	33,301	630	630x630			587	15.0	648	20.0	705	20.0
890P	21,000	35,679	630	630x630			609	20.0	666	20.0	721	20.0
960P	23,000	39,077	630	630x630			630	20.0	677	25.0	729	25.0
1020P	25,800	43,834	710	710x710			526	20.0	575	20.0	622	25.0
1140P	26,400	44,854	710	710x710			518	20.0	568	20.0	615	25.0
1340P	32,000	54,368	800	800x800			430	25.0	484	25.0	527	30.0
1520P	36,000	61,164	800	800x800			470	30.0	517	40.0	558	40.0

Notes: 1) Direct driven fan for model ACPSE 40 to 145. Motor power in Watt.
2) Please consult factory for areas shaded in grey and ESP exceeds the above table.
3) * Applicable to 50Hz only.
4) Model ACPSE 40P & 50P are not offered for installation in US region.

LIMITS AND CORRECTION FACTORS

OPERATING LIMITS

COOLING (AIR TEMPERATURE °F)

		DB	WB
OUTDOOR	MAX.	115	-
	MIN.	66	-

HEATING (AIR TEMPERATURE °F)

		DB	WB
OUTDOOR	MAX.	75	-
	MIN.	15	-

CORRECTION FACTORS

To correct for variation in air flow, use this multiplier

AIR FLOW VARIATION	TOTAL CAPACITY	SENSIBLE CAPACITY
0.9	0.980	0.950
1.0	1.000	1.000
1.1	1.015	1.045

To correct for altitude, use this multiplier

AIR ABOVE SEA LEVEL - FT	COOLING CAPACITY
0	1
2000	0.98
3000	0.97
4000	0.96
5000	0.95
6000	0.93

DIMENSIONAL DATA

ACPSE 40P

MODEL	A	B
ACPSE 40P	40 [1016]	20[508]

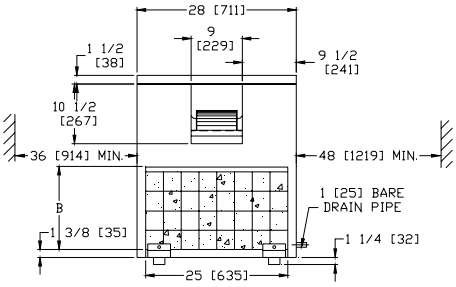

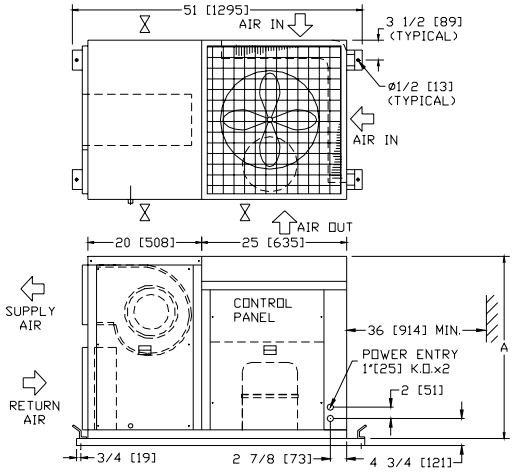

ACPSE 50P

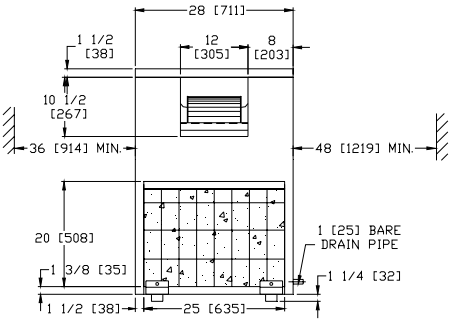

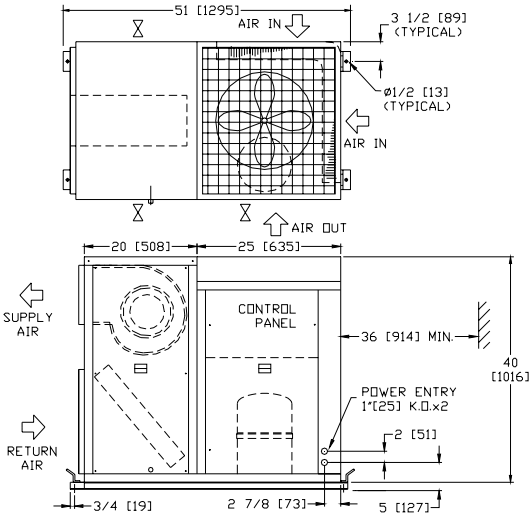

ACPSE 68P, 81P, 95P

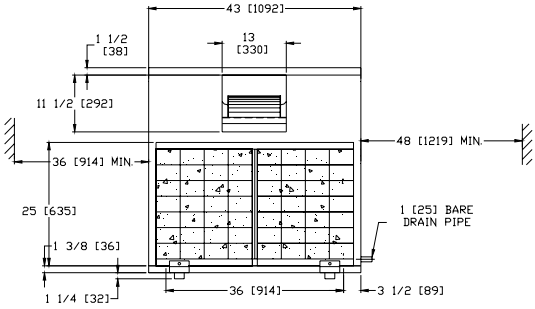

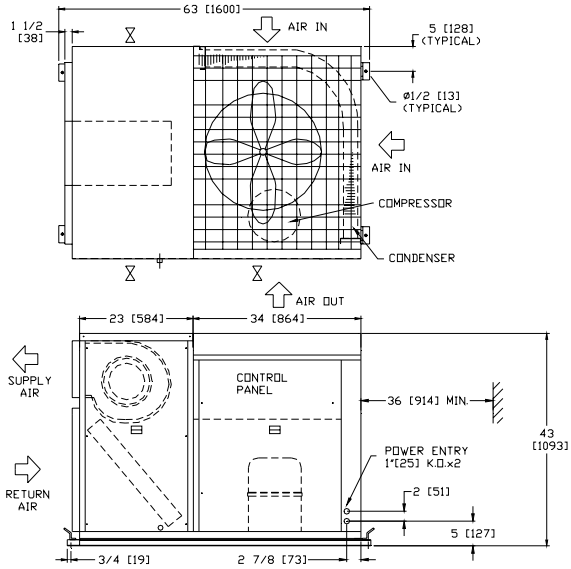

Note: All dimensions are in inches [mm].

DIMENSIONAL DATA

ACPSE 108P, 125P

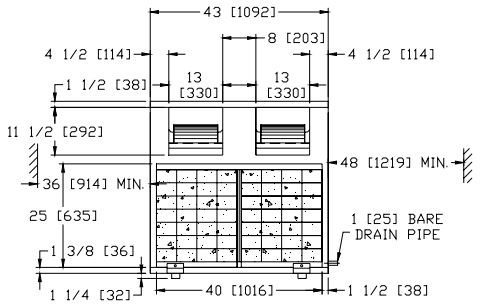

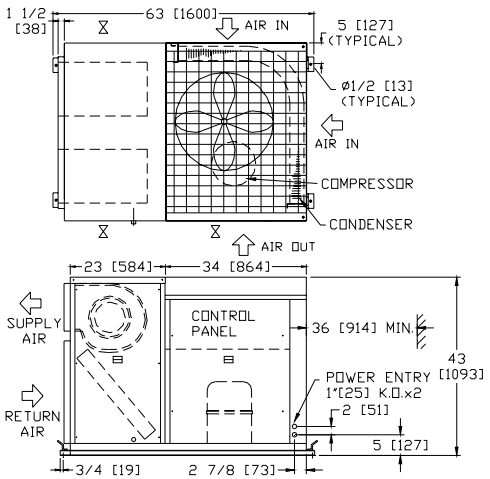

ACPSE 145P

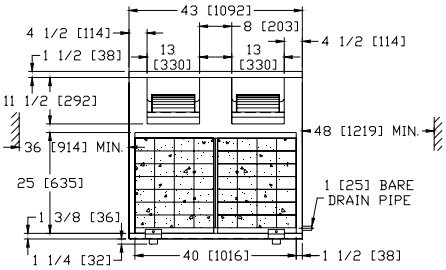

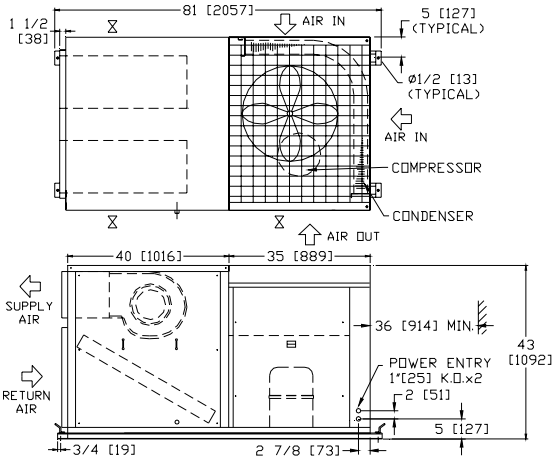

ACPSE 160P, 190P, 220P

MODEL	A	
	STANDARD	RUBBER
ACPSE 160P	13 1/2 [343]	16 1/2 [419]
ACPSE 190P	13 1/2 [343]	16 1/2 [419]
ACPSE 220P	13 1/2 [343]	16 1/2 [419]

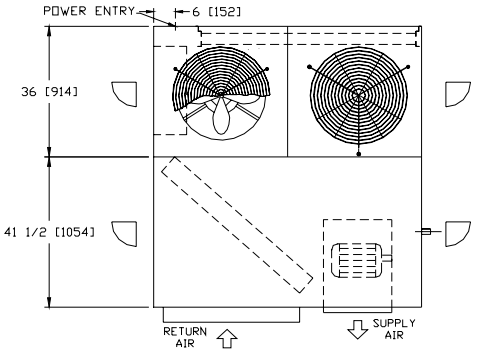

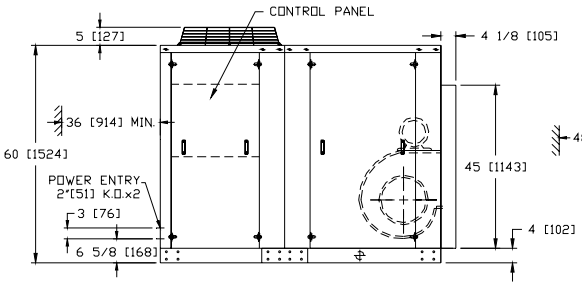

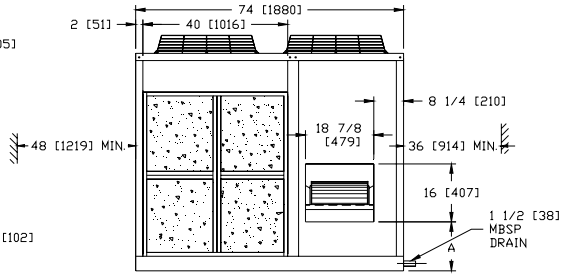

Note: All dimensions are in inches [mm].

DIMENSIONAL DATA

ACPSE 250P, 290P

MODEL	A	
	STANDARD	RUBBER
ACPSE 250P	15 3/4 [400]	18 3/4 [476]
ACPSE 290P	15 3/4 [400]	18 3/4 [476]

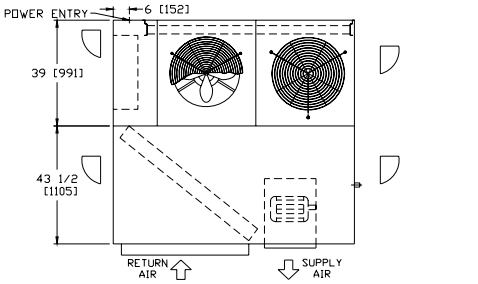

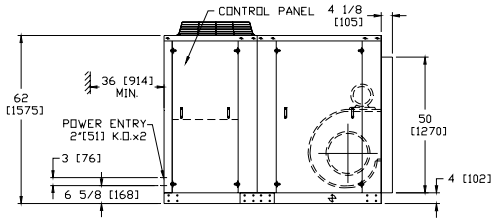

ACPSE 320P, 380P, 435P

MODEL	A	B	C	
			STANDARD	RUBBER
ACPSE 320P	22 [559]	19 [483]	17 3/4[451]	18 3/4 [476]
ACPSE 380P	22 [559]	19 [483]	17 3/4[451]	18 3/4 [476]
ACPSE 435P	22 1/2 [572]	22 1/2 [572]	17 [432]	18 [457]

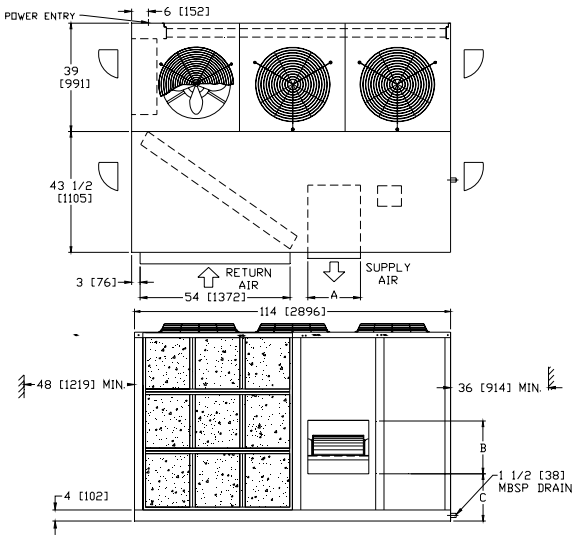

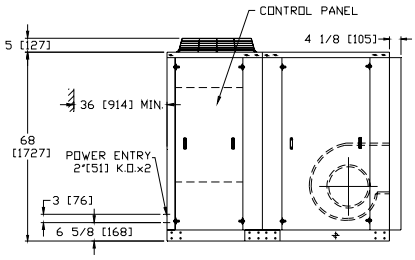

ACPSE 480P, 510P, 570P

MODEL	A	
	STANDARD	RUBBER
ACPSE 480P	18 [457]	19 [483]
ACPSE 510P	18 [457]	19 [483]
ACPSE 570P	18 [457]	19 [483]

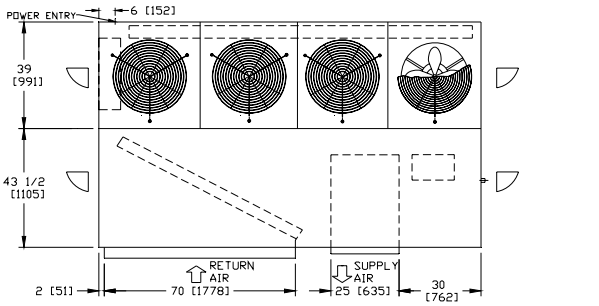

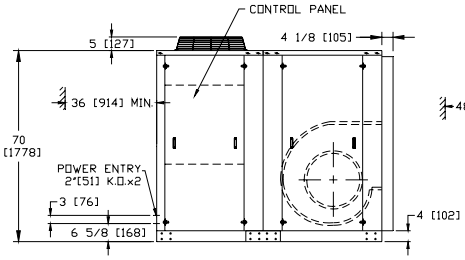

Note: All dimensions are in inches [mm].

DIMENSIONAL DATA

ACPSE 640P, 700P, 760P

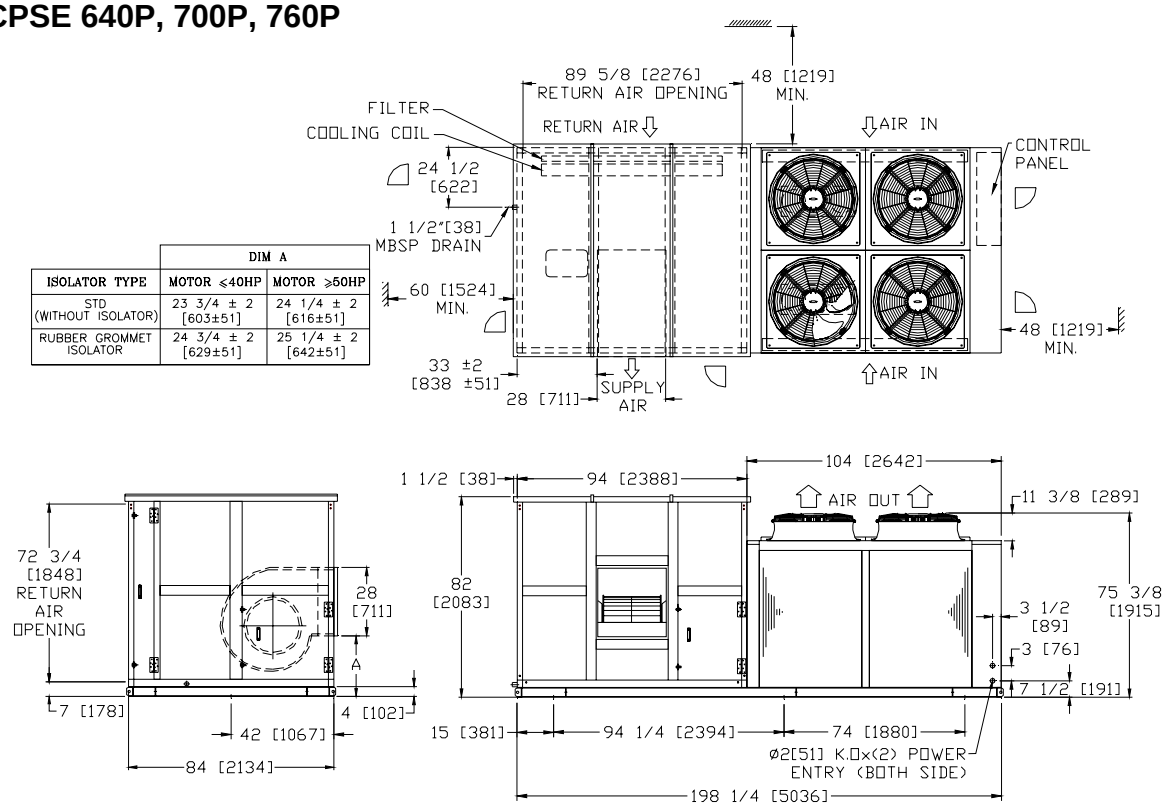

ISOLATOR TYPE	DIM A	
	MOTOR ≤40HP	MOTOR ≥50HP
STD (WITHOUT ISOLATOR)	23 3/4 ± 2 [603±51]	24 1/4 ± 2 [616±51]
RUBBER GROMMET ISOLATOR	24 3/4 ± 2 [629±51]	25 1/4 ± 2 [642±51]

ACPSE 800P, 890P

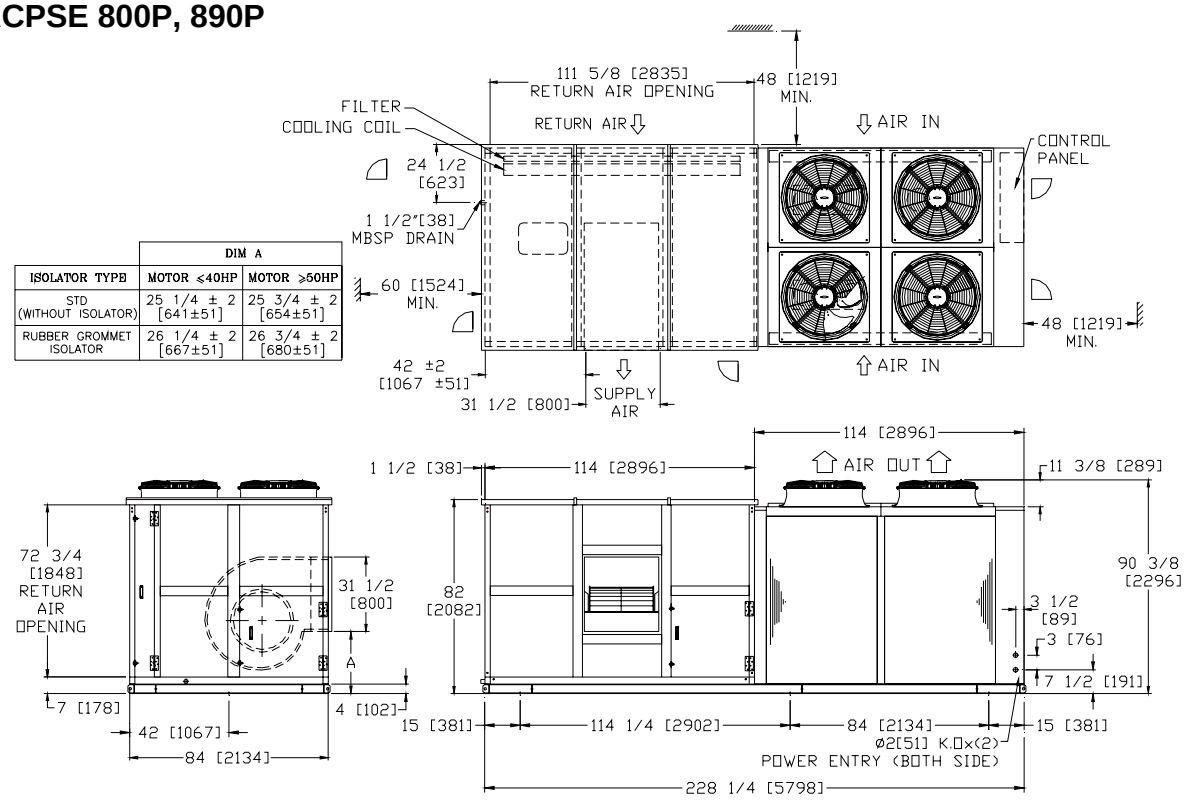

ISOLATOR TYPE	DIM A	
	MOTOR ≤40HP	MOTOR ≥50HP
STD (WITHOUT ISOLATOR)	25 1/4 ± 2 [641±51]	25 3/4 ± 2 [654±51]
RUBBER GROMMET ISOLATOR	26 1/4 ± 2 [667±51]	26 3/4 ± 2 [680±51]

Note: All dimensions are in inches [mm].

DIMENSIONAL DATA

ACPSE 960P

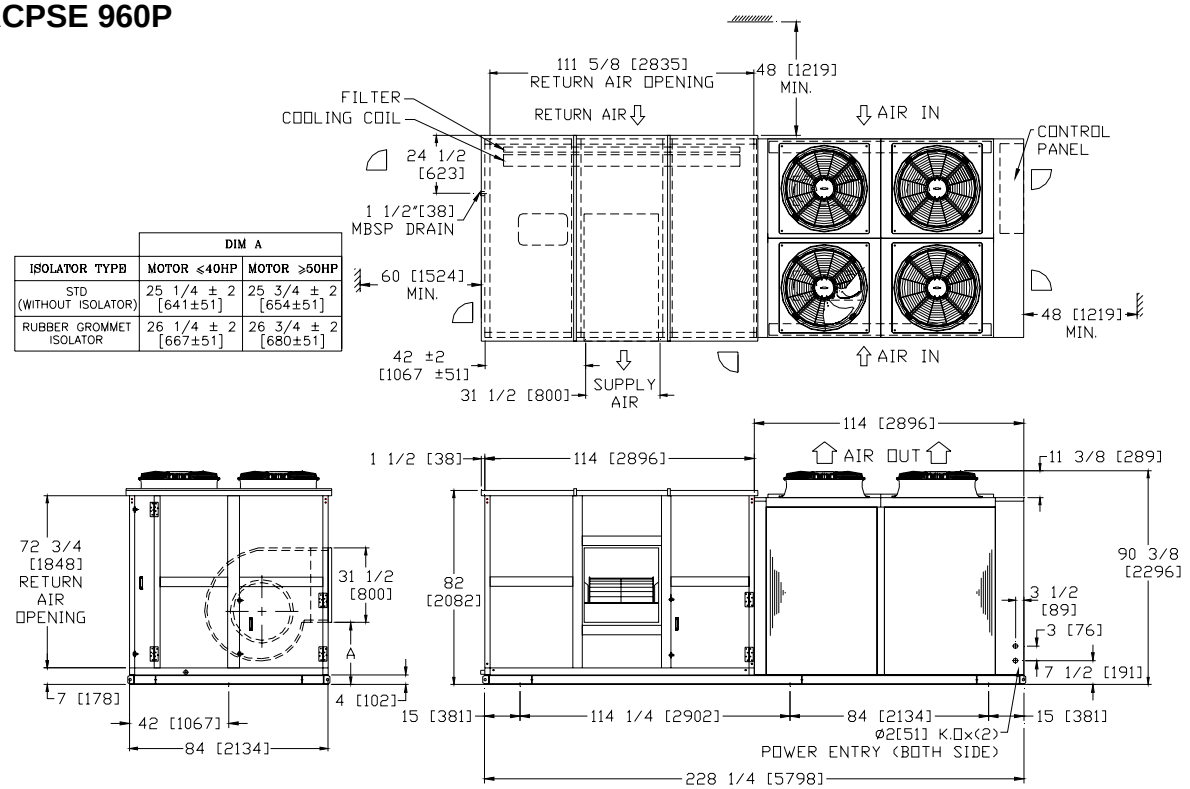

ISOLATOR TYPE	DIM A	
	MOTOR ≤40HP	MOTOR ≥50HP
STD (WITHOUT ISOLATOR)	25 1/4 ± 2 [641±51]	25 3/4 ± 2 [654±51]
RUBBER GROMMET ISOLATOR	26 1/4 ± 2 [667±51]	26 3/4 ± 2 [680±51]

ACPSE 1020P

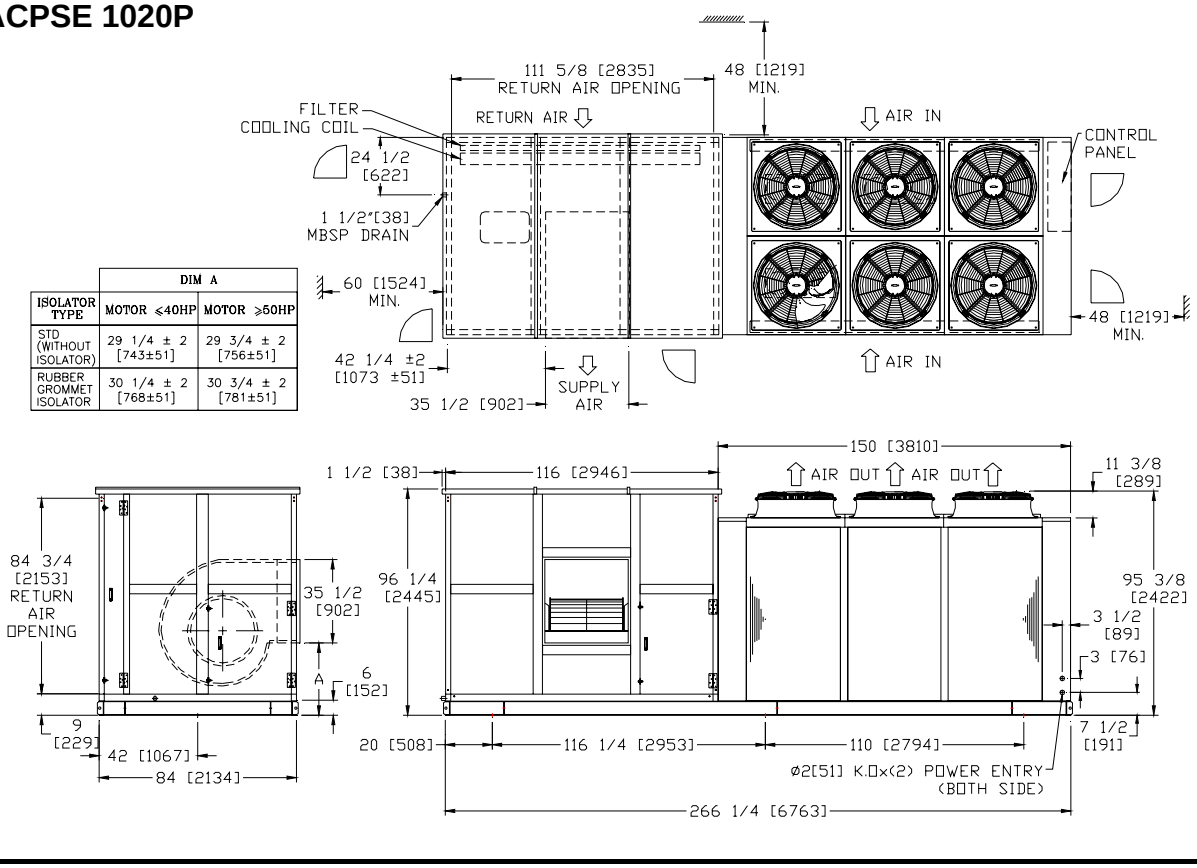

ISOLATOR TYPE	DIM A	
	MOTOR ≤40HP	MOTOR ≥50HP
STD (WITHOUT ISOLATOR)	29 1/4 ± 2 [743±51]	29 3/4 ± 2 [756±51]
RUBBER GROMMET ISOLATOR	30 1/4 ± 2 [768±51]	30 3/4 ± 2 [781±51]

Note: All dimensions are in inches [mm].

DIMENSIONAL DATA

ACPSE 1140P

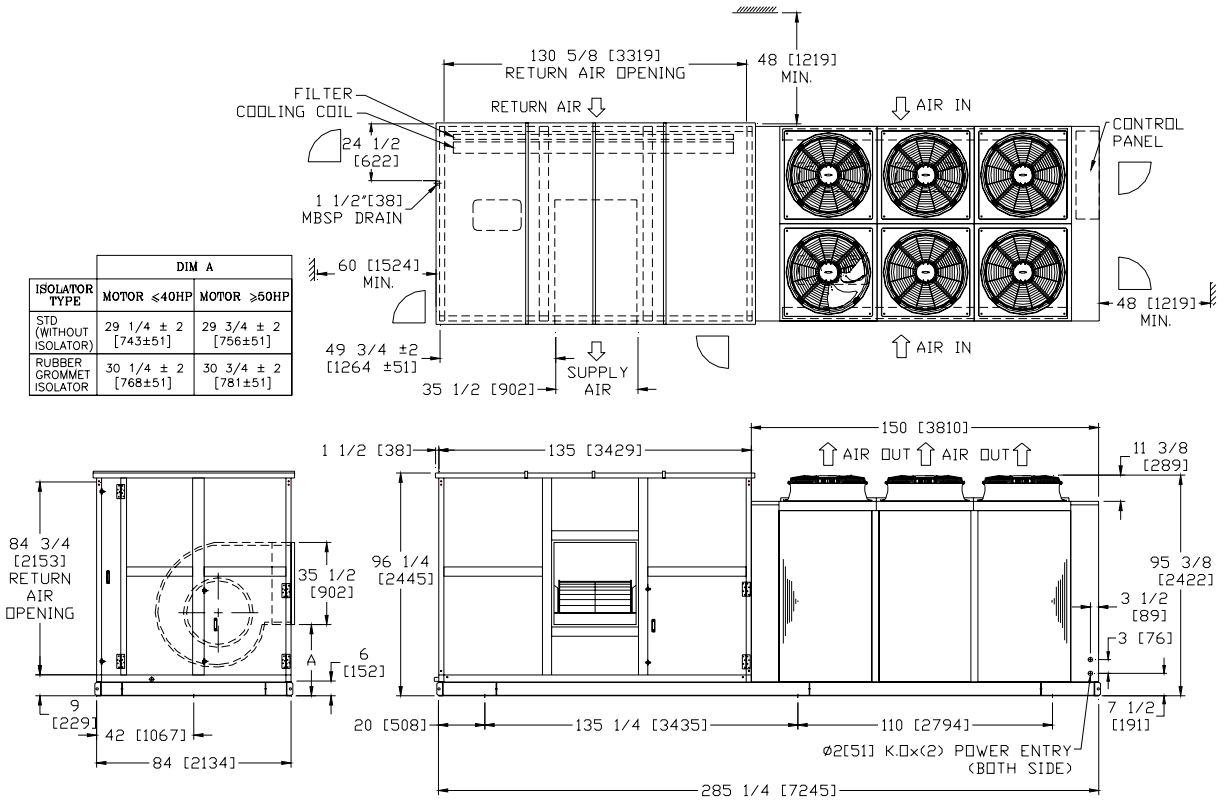

ISOLATOR TYPE	DIM A	
	MOTOR ≤40HP	MOTOR ≥50HP
STD (WITHOUT ISOLATOR)	29 1/4 ± 2 [743±51]	29 3/4 ± 2 [756±51]
RUBBER GROMMET ISOLATOR	30 1/4 ± 2 [768±51]	30 3/4 ± 2 [781±51]

ACPSE 1340P, 1520P

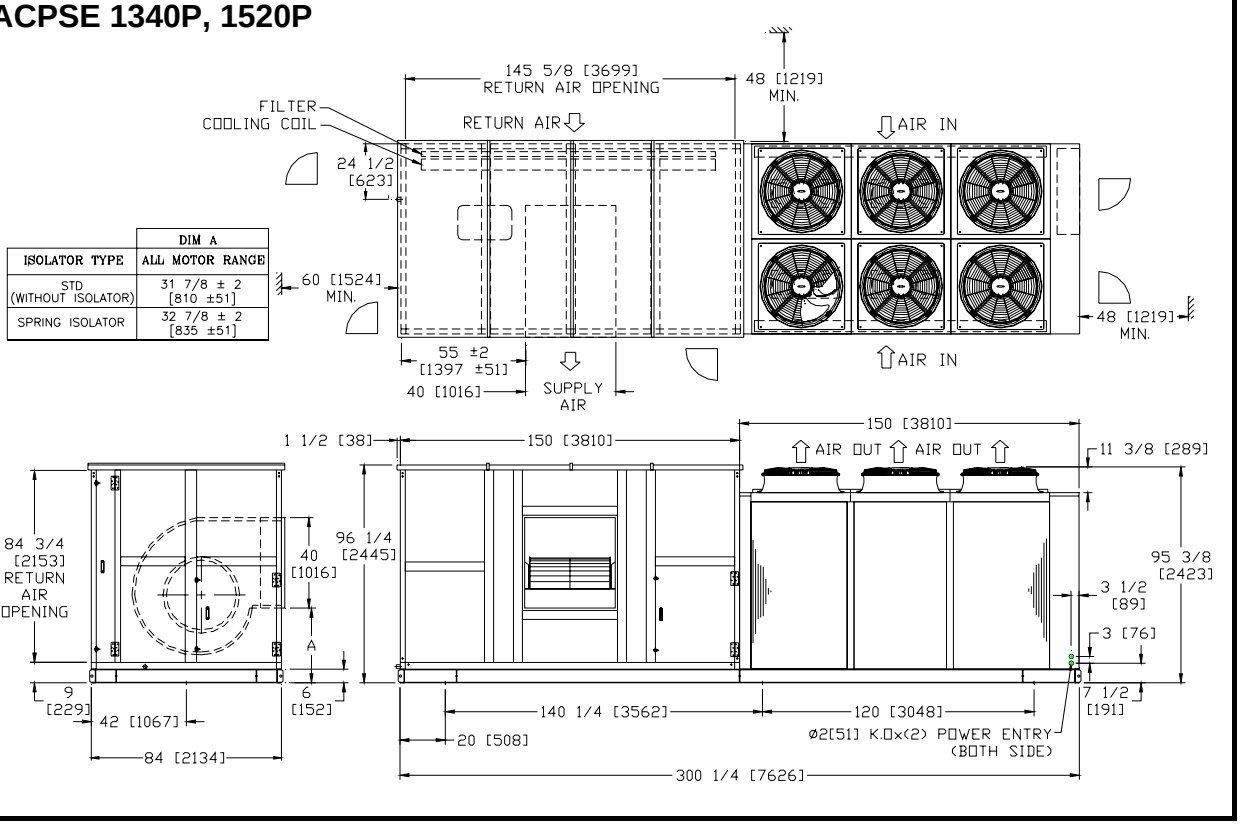

ISOLATOR TYPE	DIM A
	ALL MOTOR RANGE
STD (WITHOUT ISOLATOR)	31 7/8 ± 2 [810 ±51]
SPRING ISOLATOR	32 7/8 ± 2 [835 ±51]

Note: All dimensions are in inches [mm].

ELECTRICAL DATA

50 Hz

Model ACPSE	Compressor			Compressor Rating			Condenser Fan			Evaporator Blower (Std.)				Evaporator Blower (Max)				Unit Rating (Std.)			Unit Rating (Max)		
	Qty	Model	Power Supply	MRA (Each)	NRA (Each)	LRA (Each)	Qty	Mtr. HP (Each)	FLA	Qty	Mtr HP	FLA	LRA	Qty	Mtr HP	FLA	LRA	FLA	MCA	MFS	FLA	MCA	MFS
40P	1	ZP41K3E-TFD-593	380-420V/3PH/50Hz	1x8.0	1x6.0	1x48.0	1	1/5	2.97	1	0.4	4.6	NA	NA	NA	NA	NA	13.6	15.1	20.0	NA	NA	NA
50P	1	ZP51K5E-TFD-522	380-420V/3PH/50Hz	1x10.0	1x6.9	1x51.5	1	1/5	2.97	1	0.4	4.6	NA	NA	NA	NA	NA	14.5	16.2	20.0	NA	NA	NA
68P	1	ZP72KCE-TFD-522	380-420V/3PH/50Hz	1x15.0	1x9.8	1x75.0	1	5/8	2.0	1	1.0	8.8	NA	NA	NA	NA	NA	20.6	23.1	30.0	NA	NA	NA
81P	1	ZP83KCE-TFD-522	380-420V/3PH/50Hz	1x15.0	1x11.7	1x101.0	1	5/8	2.0	1	1.0	8.8	NA	NA	NA	NA	NA	22.5	25.4	35.0	NA	NA	NA
95P	1	ZP91KCE-TFD-522	380-420V/3PH/50Hz	1x16.2	1x12.4	1x101.0	1	5/8	2.0	1	1.0	8.8	NA	NA	NA	NA	NA	23.2	26.3	35.0	NA	NA	NA
108P	1	ZP104KCE-TFD-522	380-420V/3PH/50Hz	1x18.2	1x14.3	1x128.0	1	5/8	2.0	2	1.0 (2)	8.8 (2)	NA	NA	NA	NA	NA	33.9	37.5	50.0	NA	NA	NA
125P	1	ZP122KCE-TFD-522	380-420V/3PH/50Hz	1x21.6	1x16.6	1x139.0	1	5/8	2.0	2	1.0 (2)	8.8 (2)	NA	NA	NA	NA	NA	36.2	40.4	50.0	NA	NA	NA
145P	1	ZP137KCE-TFD-522	380-420V/3PH/50Hz	1x25.0	1x18.3	1x118.0	1	5/8	2.0	2	1.0 (2)	8.8 (2)	NA	NA	NA	NA	NA	37.9	42.5	60.0	NA	NA	NA
160P	1	ZP154KCE-TFD-522	380-420V/3PH/50Hz	1x31.0	1x20.8	1x140.0	2	5/8	2.0	1	3.0	4.7	24.0	1	4.0	6.4	36.0	29.5	34.7	50.0	31.2	36.4	50.0
190P	1	ZP182KCE-TFD-522	380-420V/3PH/50Hz	1x34.0	1x26.3	1x174.0	2	5/8	2.0	1	3.0	4.7	24.0	1	4.0	6.4	36.0	35.0	41.6	60.0	36.7	43.3	60.0
220P	2	ZP104KCE-TFD-522	380-420V/3PH/50Hz	2x18.2	2x14.3	2x128.0	2	5/8	2.0	1	4.0	6.4	36.0	1	5.5	8.2	48.0	39.0	42.6	50.0	40.8	44.4	50.0
250P	2	ZP122KCE-TFD-522	380-420V/3PH/50Hz	2x21.6	2x16.6	2x139.0	2	5/8	2.0	1	4.0	6.4	36.0	1	5.5	8.2	48.0	43.6	47.8	60.0	45.4	49.6	60.0
290P	2	ZP137KCE-TFD-522	380-420V/3PH/50Hz	2x25.0	2x18.3	2x118.0	2	5/8	2.0	1	5.5	8.2	48.0	1	7.5	11.0	72.0	48.8	53.4	70.0	51.6	56.2	70.0
320P	2	ZP154KCE-TFD-522	380-420V/3PH/50Hz	2x31.0	2x20.8	2x140.0	3	5/8	2.0	1	5.5	8.2	48.0	1	7.5	11.0	72.0	55.8	61.0	80.0	58.6	63.8	80.0
380P	2	ZP182KCE-TFD-522	380-420V/3PH/50Hz	2x34.0	2x26.3	2x174.0	3	5/8	2.0	1	7.5	11.0	72.0	1	10.0	14.3	97.0	69.6	76.2	100.0	72.9	79.5	100.0
435P	3	ZP137KCE-TFD-522	380-420V/3PH/50Hz	3x25.0	3x18.3	3x118.0	3	5/8	2.0	1	10.0	14.3	97.0	1	15.0	21.2	144.0	75.2	79.8	90.0	82.1	86.7	100.0
480P	3	ZP154KCE-TFD-522	380-420V/3PH/50Hz	3x31.0	3x20.8	3x140.0	4	5/8	2.0	1	7.5	11.0	72.0	1	10.0	14.3	97.0	81.4	86.6	100.0	84.7	89.9	110.0
510P	1	ZP182KCE-TFD-522	380-420V/3PH/50Hz	1x34.0	1x26.3	1x174.0	4	5/8	2	1	15.0	21.2	144.0	1	15.0	21.2	144.0	97.1	103.7	125.0	97.1	103.7	125.0
	2	ZP154KCE-TFD-522	380-420V/3PH/50Hz	2x31.0	2x20.8	2x140.0																	
570P	3	ZP182KCE-TFD-522	380-420V/3PH/50Hz	3x34.0	3x26.3	3x174.0	4	5/8	2	1	15.0	21.2	144.0	1	20.0	28.2	203.0	101.2	114.7	125.0	115.1	121.7	125.0
640P	4	ZP154KCE-TFD-425	380-420V/3PH/50Hz	4x31.0	4x20.8	4x140.0	4	1 1/2	3.2	1	10.0	14.3	97.0	1	15.0	21.2	144.0	110.3	115.5	125.0	117.2	122.4	125.0
700P	2	ZP182KCE-TFD-425	380-420V/3PH/50Hz	2x34.0	2x26.3	2x174.0	4	1 1/2	3.2	1	15.0	21.2	144.0	1	20.0	28.2	203.0	128.2	134.8	150.0	135.2	141.8	150.0
	2	ZP154KCE-TFD-425	380-420V/3PH/50Hz	2x31.0	2x20.8	2x140.0																	
760P	4	ZP182KCE-TFD-425	380-420V/3PH/50Hz	4x34.0	4x26.3	4x174.0	4	1 1/2	3.2	1	15.0	21.2	144.0	1	20.0	28.2	203.0	139.2	145.8	150.0	146.2	152.8	175.0
800P	1	ZP154KCE-TFD-522	380-420V/3PH/50Hz	1x31.0	1x20.8	1x140.0	4	1 1/2	3.2	1	15.0	21.2	144.0	1	20.0	28.2	203.0	138.0	143.2	150.0	145.0	150.2	150.0
	4	ZP154KCE-TFD-425	380-420V/3PH/50Hz	4x31.0	4x20.8	4x140.0																	
890P	1	ZP182KCE-TFD-522	380-420V/3PH/50Hz	1x34.0	1x26.3	1x174.0	4	1 1/2	3.2	1	20.0	28.2	203.0	1	20.0	28.2	203.0	161.5	168.1	175.0	161.5	168.1	175.0
	2	ZP182KCE-TFD-425	380-420V/3PH/50Hz	2x34.0	2x26.3	2x174.0																	
	2	ZP154KCE-TFD-425	380-420V/3PH/50Hz	2x31.0	2x20.8	2x140.0																	
960P	6	ZP154KCE-TFD-425	380-420V/3PH/50Hz	6x31.0	6x20.8	6x140.0	4	1 1/2	3.2	1	20.0	28.2	203.0	1	25.0	33.6	232.0	165.8	171.0	175.0	171.2	176.4	175.0
1020P	2	ZP182KCE-TFD-425	380-420V/3PH/50Hz	2x34.0	2x26.3	2x174.0	6	1 1/2	3.2	1	20.0	28.2	203.0	1	25.0	33.6	232.0	183.2	189.8	200.0	188.6	195.2	200.0
	4	ZP154KCE-TFD-425	380-420V/3PH/50Hz	4x31.0	4x20.8	4x140.0																	
1140P	6	ZP182KCE-TFD-425	380-420V/3PH/50Hz	6x34.0	6x26.3	6x174.0	6	1 1/2	3.2	1	20.0	28.2	203.0	1	25.0	33.6	232.0	205.2	211.8	225.0	210.6	217.2	225.0
1340P	2	ZP182KCE-TFD-425	380-420V/3PH/50Hz	2x34.0	2x26.3	2x174.0	6	1 1/2	3.2	1	25.0	33.6	232.0	1	30.0	39.5	273.0	230.2	236.8	250.0	236.1	242.7	250.0
	6	ZP154KCE-TFD-425	380-420V/3PH/50Hz	6x31.0	6x20.8	6x140.0																	
1520P	8	ZP182KCE-TFD-425	380-420V/3PH/50Hz	8x34.0	8x26.3	8x174.0	6	1 1/2	3.2	1	30.0	39.5	273.0	1	40.0	52.8	333.0	269.1	275.7	300.0	282.4	289.0	300.0

Compressor NRA value is based on the following condition:
Evaporating temperature: 45°F, Condensing temperature: 130°F, Subcooling: 8.3K, Superheat: 11.1K, Ambient Temperature: 95°F"

ELECTRICAL DATA

60 Hz

Model 6ACPSE	Compressor Rating			Condenser Fan			Evaporator Blower (Std.)				Evaporator Blower (Max)				Unit Rating (Std.)			Unit Rating (Max)		
	MRA (Each)	NRA (Each)	LRA (Each)	Qty	Mtr. HP (Each)	FLA	Qty	Mtr HP	FLA	LRA	Qty	Mtr HP	FLA	LRA	FLA	MCA	MFS	FLA	MCA	MFS
208-230V / 3PH / 60HZ																				
40P	1x19.0	1x9.4	1x77.0	1	1/5	1.3	1	425W	3.8	NA	NA	NA	NA	NA	14.5	16.9	25.0	NA	NA	NA
50P	1x23.0	1x12.0	1x91.0	1	1/5	1.3	1	750W	7.0	NA	NA	NA	NA	NA	20.3	23.3	35.0	NA	NA	NA
68P	1x22.0	1x16.8	1x123.0	1	5/8	3.7	1	750W	7.0	NA	NA	NA	NA	NA	27.5	31.7	45.0	NA	NA	NA
81P	1x31.0	1x20.1	1x164.0	1	5/8	3.7	2	425W	2x3.8	NA	NA	NA	NA	NA	31.4	36.4	50.0	NA	NA	NA
95P	1x33.0	1x22.0	1x164.0	1	5/8	3.7	2	425W	2x3.8	NA	NA	NA	NA	NA	33.3	38.8	60.0	NA	NA	NA
108P	1x35.6	1x24.8	1x191.0	1	5/8	3.7	2	750W	2x7.0	NA	NA	NA	NA	NA	42.5	48.7	70.0	NA	NA	NA
125P	1x35.5	1x27.2	1x239.0	1	5/8	3.7	2	750W	2x7.0	NA	NA	NA	NA	NA	44.9	51.7	70.0	NA	NA	NA
145P	1x40.5	1x30.9	1x240.0	1	5/8	3.7	2	750W	2x7.0	NA	NA	NA	NA	NA	48.6	56.3	80.0	NA	NA	NA
160P	1x55.0	1x38.0	1x245.0	2	5/8	3.7	1	3.0	8.8	64.0	1	4.0	11.5	64.0	54.2	63.7	100.0	56.9	66.4	100.0
190P	1x59.0	1x42.8	1x300.0	2	5/8	3.7	1	3.0	8.8	64.0	1	4.0	11.5	64.0	59.0	59.7	110.0	61.7	72.4	110.0
220P	1x74.0	1x52.0	1x340.0	2	5/8	3.7	1	4.0	11.5	94.0	1	5.5	16.4	116.0	70.9	83.9	125.0	75.8	88.8	125.0
250P	2x35.5	2x27.2	2x239.0	2	5/8	3.7	1	4.0	11.5	94.0	1	5.5	16.4	116.0	73.3	80.1	100.0	78.2	85.0	110.0
290P	2x40.5	2x30.9	2x240.0	2	5/8	3.7	1	5.5	16.4	116.0	1	7.5	21.0	149.0	85.6	93.3	125.0	90.2	97.9	125.0
320P	2x55.0	2x38.0	2x245.0	3	5/8	3.7	1	5.5	16.4	116.0	1	7.5	21.0	149.0	103.5	113.0	150.0	108.1	117.6	150.0
380P	2x59.0	2x42.8	2x300.0	3	5/8	3.7	1	7.5	21.0	149.0	1	10.0	26.0	188.0	117.7	128.4	150.0	122.7	133.4	175.0
480P	3x55.0	3x38.0	3x245.0	4	5/8	3.7	1	7.5	21.0	149.0	1	10.0	26.0	188.0	149.8	159.3	200.0	154.8	164.3	200.0
510P	3x59.0	3x42.8	3x300.0	4	5/8	3.7	1	15.0	39.0	288.0	1	15.0	39.0	288.0	182.2	192.9	200.0	182.2	192.9	200.0
570P	2x59.0 1x74.0	2x42.8 1x52.0	2x300.0 1x340.0	4	5/8	3.7	1	15.0	39.0	288.0	1	20.0	51.0	376.0	191.4	204.4	250.0	203.4	216.4	250.0
640P	3x74.0	3x52.0	3x340.0	4	1 1/2	5.6	1	10.0	26.0	188.0	1	15.0	39.0	288.0	204.4	217.4	250.0	217.4	230.4	250.0
700P	4x59.0	4x42.8	4x300.0	4	1 1/2	5.6	1	15.0	39.0	288.0	1	20.0	51.0	376.0	232.6	242.4	250.0	244.6	257.4	300.0
760P	2x59.0 2x74.0	2x42.8 2x52.0	2x300.0 2x340.0	4	1 1/2	5.6	1	15.0	39.0	288.0	1	20.0	51.0	376.0	251.0	264.0	300.0	263.0	276.0	300.0
800P	4x74.0	4x52.0	4x340.0	4	1 1/2	5.6	1	15.0	39.0	288.0	1	20.0	51.0	376.0	269.4	282.4	300.0	281.4	294.4	300.0
890P	4x59.0 1x59.0	4x42.8 1x42.8	4x300.0 1x300.0	4	1 1/2	5.6	1	20.0	51.0	376.0	1	20.0	51.0	376.0	287.4	298.1	300.0	287.4	298.1	300.0
960P	6x55.0	6x38.0	6x245.0	4	1 1/2	5.6	1	20.0	51.0	376.0	1	25.0	65.0	442.0	301.4	310.9	350.0	315.4	324.9	350.0
1020P	6x59.0	6x42.8	6x300.0	6	1 1/2	5.6	1	20.0	51.0	376.0	1	25.0	65.0	442.0	341.4	352.1	400.0	355.4	366.1	400.0
1140P	4x59.0 2x74.0	4x42.8 2x52.0	4x300.0 2x340.0	6	1 1/2	5.6	1	20.0	51.0	376.0	1	25.0	65.0	442.0	359.8	372.8	400.0	373.8	386.8	400.0
1340P	6x59.0 2x55.0	6x42.8 2x38.0	6x300.0 2x245.0	6	1 1/2	5.6	1	25.0	65.0	442.0	1	30.0	79.0	581.0	431.4	442.1	450.0	445.4	456.1	500.0
1520P	6x59.0 2x74.0	6x42.8 2x52.0	6x300.0 2x340.0	6	1 1/2	5.6	1	30.0	79.0	581.0	1	40.0	102.0	792.0	462.2	486.4	500.0	485.2	509.4	500.0
380V / 3PH / 60HZ																				
40P	1x10.0	1x7.6	1x64.0	1	1/5	1.5	1	425W	3.8	NA	NA	NA	NA	NA	12.9	14.8	20.0	NA	NA	NA
50P	1x10.0	1x7.6	1x64.0	1	1/5	1.5	1	750W	7.0	NA	NA	NA	NA	NA	16.1	18.0	25.0	NA	NA	NA
68P	1x13.5	1x9.7	1x83.0	1	5/8	2.0	1	750W	7.0	NA	NA	NA	NA	NA	18.7	21.1	30.0	NA	NA	NA
81P	1x15.0	1x11.5	1x73.0	1	5/8	2.0	2	425W	2x3.8	NA	NA	NA	NA	NA	21.1	24.0	35.0	NA	NA	NA
95P	1x18.1	1x13.0	1x94.3	1	5/8	2.0	2	425W	2x3.8	NA	NA	NA	NA	NA	22.6	25.9	35.0	NA	NA	NA
108P	1x19.1	1x15.2	1x123.0	1	5/8	2.0	2	750W	2x7.0	NA	NA	NA	NA	NA	31.2	35.0	50.0	NA	NA	NA
125P	1x21.4	1x16.0	1x135.0	1	5/8	2.0	2	750W	2x7.0	NA	NA	NA	NA	NA	32.0	36.0	50.0	NA	NA	NA
145P	1x24.5	1x18.7	1x151.6	1	5/8	2.0	2	750W	2x7.0	NA	NA	NA	NA	NA	34.7	39.4	50.0	NA	NA	NA
160P	1x31.6	1x22.6	1x145.0	2	5/8	2.0	1	3.0	4.8	35.1	1	4.0	6.3	51.5	31.4	37.1	60.0	32.9	38.6	60.0
190P	1x33.0	1x24.4	1x139.0	2	5/8	2.0	1	3.0	4.8	35.1	1	4.0	6.3	51.5	33.2	39.3	60.0	34.7	40.8	60.0
220P	1x39.0	1x31.7	1x196.0	2	5/8	2.0	1	4.0	6.3	51.5	1	5.5	9.0	63.6	42.0	49.9	80.0	44.7	52.6	80.0
250P	2x21.4	2x16.0	2x135.0	2	5/8	2.0	1	4.0	6.3	51.5	1	5.5	9.0	63.6	42.3	46.3	60.0	45.0	49.0	60.0
290P	2x24.5	2x18.7	2x151.6	2	5/8	2.0	1	5.5	9.0	63.6	1	7.5	11.5	81.7	50.4	55.1	70.0	52.9	57.6	70.0
320P	2x31.6	2x22.6	2x145.0	3	5/8	2.0	1	5.5	9.0	63.6	1	7.5	11.5	81.7	60.2	65.9	80.0	62.7	68.4	90.0
380P	2x33.0	2x24.4	2x139.0	3	5/8	2.0	1	7.5	11.5	81.7	1	10.0	14.4	102.9	66.3	72.4	90.0	69.2	75.3	100.0
435P	2x39.0	2x31.7	2x196.0	3	5/8	2.0	1	10.0	14.4	102.9	1	15.0	21.5	157.4	83.8	91.8	110.0	90.9	98.8	125.0
480P	3x31.6	3x22.6	3x145.0	4	5/8	2.0	1	7.5	11.5	81.7	1	10.0	14.4	102.9	87.3	93.0	110.0	90.2	95.9	110.0
510P	3x33.0	3x24.4	3x139.0	4	5/8	2.0	1	15.0	21.5	157.4	1	15.0	21.5	157.4	102.7	108.8	125.0	102.7	108.8	125.0
570P	2x33.0 1x39.0	2x24.4 1x31.7	2x139.0 1x196.0	4	5/8	2.0	1	15.0	21.5	157.4	1	20.0	27.9	205.8	110.0	117.9	150.0	116.4	124.3	150.0
640P	3x39.0	3x31.7	3x196.0	4	1 1/2	3.2	1	10.0	14.4	102.9	1	15.0	21.5	157.4	122.3	130.2	150.0	129.4	137.3	150.0
700P	4x33.0	4x24.4	4x139.0	4	1 1/2	3.2	1	15.0	21.5	157.4	1	20.0	27.9	205.8	131.9	138.0	150.0	138.3	144.4	150.0
760P	2x33.0 2x39.0	2x24.4 2x31.7	2x139.0 2x196.0	4	1 1/2	3.2	1	15.0	21.5	157.4	1	20.0	27.9	205.8	146.5	154.4	175.0	152.9	160.8	175.0
800P	4x39.0	4x31.7	4x196.0	4	1 1/2	3.2	1	15.0	21.5	157.4	1	20.0	27.9	205.8	161.1	169.0	200.0	167.5	175.4	200.0
890P	4x33.0 1x33.0	4x24.4 1x24.4	4x139.0 1x139.0	4	1 1/2	3.2	1	20.0	27.9	205.8	1	20.0	27.9	205.8	162.7	168.8	200.0	162.7	168.8	200.0
960P	6x31.6	6x22.6	6x145.0	4	1 1/2	3.2	1	20.0	27.9	205.8	1	25.0	35.4	242.1	176.3	183.3	200.0	183.8	192.7	225.0
1020P	6x33.0	6x24.4	6x139.0	6	1 1/2	3.2	1	20.0	27.9	205.8	1	25.0	35.4	242.1	193.5	200.5	225.0	201.0	209.9	225.0
1140P	4x33.0 2x39.0	4x24.4 2x31.7	4x139.0 2x196.0	6	1 1/2	3.2	1	20.0	27.9	205.8	1	25.0	35.4	242.1	208.1	216.0	250.0	215.6	224.5	250.0
1340P	6x33.0 2x31.6	6x24.4 2x22.6	6x139.0 2x145.0	6	1 1/2	3.2	1	25.0	35.4	242.1	1	30.0	43.0	317.8	246.2	255.1	275.0	253.8	264.6	300.0
1520P	6x33.0 2x39.0	6x24.4 2x31.7	6x139.0 2x196.0	6	1 1/2	3.2	1	30.0	43.0	317.8	1	40.0	55.7	433.4	272.0	282.8	300.0	284.7	299.0	350.0

Compressor NRA value is based on the following condition:
Evaporating temperature: 45°F, Condensing temperature: 130°F, Subcooling: 8.3K, Superheat: 11.1K, Ambient Temperature: 95°F"

ELECTRICAL DATA

60 Hz

Model 6ACPSE	Compressor Rating			Condenser Fan			Evaporator Blower (Std.)				Evaporator Blower (Max)				Unit Rating (Std.)			Unit Rating (Max)		
	MRA (Each)	NRA (Each)	LRA (Each)	Qty	Mtr. HP (Each)	FLA	Qty	Mtr HP	FLA	LRA	Qty	Mtr HP	FLA	LRA	FLA	MCA	MFS	FLA	MCA	MFS
460V / 3PH / 60HZ																				
40P	1x6.0	1x4.7	1x35.0	1	1/5	1.5	1	425W	3.8	NA	NA	NA	NA	NA	10.0	11.2	15.0	NA	NA	NA
50P	1x8.0	1x6.0	1x46.0	1	1/5	1.5	1	750W	7.0	NA	NA	NA	NA	NA	14.5	16.5	20.0	NA	NA	NA
68P	1x11.8	1x8.3	1x62.0	1	5/8	1.7	1	750W	7.0	NA	NA	NA	NA	NA	17.0	19.1	25.0	NA	NA	NA
81P	1x15.0	1x9.7	1x75.0	1	5/8	1.7	2	425W	2x3.8	NA	NA	NA	NA	NA	19.0	21.4	30.0	NA	NA	NA
95P	1x15.0	1x11.8	1x100.0	1	5/8	1.7	2	425W	2x3.8	NA	NA	NA	NA	NA	21.1	24.1	35.0	NA	NA	NA
108P	1x16.2	1x12.6	1x100.0	1	5/8	1.7	2	750W	2x7.0	NA	NA	NA	NA	NA	28.3	31.5	40.0	NA	NA	NA
125P	1x18.2	1x14.4	1x130.0	1	5/8	1.7	2	750W	2x7.0	NA	NA	NA	NA	NA	30.1	33.7	45.0	NA	NA	NA
145P	1x21.6	1x16.9	1x140.0	1	5/8	1.7	2	750W	2x7.0	NA	NA	NA	NA	NA	32.6	36.8	50.0	NA	NA	NA
160P	1x25.0	1x18.0	1x125.0	2	5/8	1.7	1	3.0	4.0	29.0	1	4.0	5.2	42.5	25.4	29.9	45.0	26.6	31.1	50.0
190P	1x27.0	1x21.0	1x150.0	2	5/8	1.7	1	3.0	4.0	29.0	1	4.0	5.2	42.5	28.4	33.7	50.0	29.6	34.9	50.0
220P	1x34.0	1x26.3	1x173.0	2	5/8	1.7	1	4.0	5.2	42.5	1	5.5	7.4	52.5	34.9	41.5	60.0	37.1	43.7	70.0
250P	2x18.2	2x14.4	2x130.0	2	5/8	1.7	1	4.0	5.2	42.5	1	5.5	7.4	52.5	37.4	41.0	50.0	39.6	43.2	50.0
290P	2x21.6	2x16.9	2x140.0	2	5/8	1.7	1	5.5	7.4	52.5	1	7.5	9.5	67.5	44.6	48.8	65.0	46.7	50.9	65.0
320P	2x25.0	2x18.0	2x125.0	3	5/8	1.7	1	5.5	7.4	52.5	1	7.5	9.5	67.5	48.5	53.0	70.0	50.6	55.1	70.0
380P	2x27.0	2x21.0	2x150.0	3	5/8	1.7	1	7.5	9.5	67.5	1	10.0	11.9	85.0	56.6	61.9	80.0	59.0	64.3	80.0
435P	2x34.0	2x26.3	2x173.0	3	5/8	1.7	1	10.0	11.9	85.0	1	15.0	17.8	130.0	69.6	76.2	100.0	75.5	82.1	100.0
480P	3x25.0	3x18.0	3x125.0	4	5/8	1.7	1	7.5	9.5	67.5	1	10.0	11.9	85.0	70.3	74.8	90.0	72.7	77.2	90.0
510P	3x27.0	3x21.0	3x150.0	4	5/8	1.7	1	15.0	17.8	130.0	1	15.0	17.8	130.0	87.6	92.9	110.0	87.6	92.9	110.0
570P	2x27.0	2x21.0	2x150.0	4	5/8	1.7	1	15.0	17.8	130.0	1	20.0	23.0	170.0	92.9	99.5	125.0	98.1	104.7	125.0
	1x34.0	1x26.3	1x173.0																	
640P	3x34.0	3x26.3	3x173.0	4	1 1/2	3.2	1	10.0	11.9	85.0	1	15.0	17.8	130.0	103.6	110.2	125.0	109.5	116.1	125.0
700P	4x27.0	4x21.0	4x150.0	4	1 1/2	3.2	1	15.0	17.8	130.0	1	20.0	23.0	170.0	114.6	119.9	125.0	119.8	125.1	150.0
760P	2x27.0	2x21.0	2x150.0	4	1 1/2	3.2	1	15.0	17.8	130.0	1	20.0	23.0	170.0	125.2	131.8	150.0	130.4	137.0	150.0
	2x34.0	2x26.3	2x173.0																	
800P	4x34.0	4x26.3	4x173.0	4	1 1/2	3.2	1	15.0	17.8	130.0	1	20.0	23.0	170.0	135.8	142.4	150.0	141.0	147.6	175.0
890P	4x27.0	4x21.0	4x150.0	4	1 1/2	3.2	1	20.0	23.0	170.0	1	20.0	23.0	170.0	140.8	146.1	150.0	140.8	146.1	150.0
	1x27.0	1x21.0	1x150.0																	
960P	6x25.0	6x18.0	6x125.0	4	1 1/2	3.2	1	20.0	23.0	170.0	1	25.0	29.3	200.0	143.8	148.3	150.0	150.1	154.6	175.0
1020P	6x27.0	6x21.0	6x150.0	6	1 1/2	3.2	1	20.0	23.0	170.0	1	25.0	29.3	200.0	168.2	173.5	200.0	174.5	179.8	200.0
1140P	4x27.0	4x21.0	4x150.0	6	1 1/2	3.2	1	20.0	23.0	170.0	1	25.0	29.3	200.0	178.8	185.4	200.0	185.1	191.7	200.0
	2x34.0	2x26.3	2x173.0																	
1340P	6x27.0	6x21.0	6x150.0	6	1 1/2	3.2	1	25.0	29.3	200.0	1	30.0	35.5	262.5	210.5	215.8	250.0	216.7	222.0	250.0
	2x25.0	2x18.0	2x125.0																	
1520P	6x27.0	6x21.0	6x150.0	6	1 1/2	3.2	1	30.0	35.5	262.5	1	40.0	46.0	358.0	233.3	239.9	250.0	243.8	250.4	300.0
	2x34.0	2x26.3	2x173.0																	

Compressor NRA value is based on the following condition:
Evaporating temperature: 45°F, Condensing temperature: 130°F, Subcooling: 8.3K, Superheat: 11.1K, Ambient Temperature: 95°F"

TYPICAL WIRING SCHEMATIC

With IEC Direct-On-Line (DOL) Option

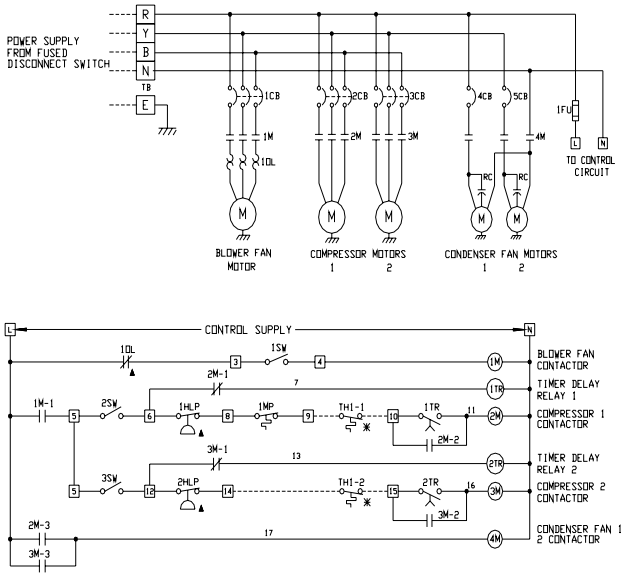

GUIDE SPECIFICATIONS

1 GENERAL

Air cooled packaged unit shall include compressor(s), evaporator and condenser coils with fans, refrigeration piping, electrical components and enclosing cabinet in one piece. The units shall be factory assembled, internally wired, fully refrigerant charged with R410A and are suitable for outdoor installation on ground level with ducted system. The units shall be capable to operate up to 115°F [46°C] ambient temperature without failure.

2 CABINET

The unit cabinet shall be constructed from heavy gauge galvanized steel with epoxy painted for excellent finished, weatherability and corrosion resistance up to 1000 hours salt spray test according to ASTM B-117. Evaporator section shall be of 13mm [1/2 inch] (model ACPSE Series 40P to 145P) and 25mm [1 inch] (model ACPSE Series 160P and above) thick single skin and lined with minimum 2lbs/ft^3 [32kg/m^3] density having thermal conductivity of 0.0346W/m.K [0.24Btu.in/ft^2.h.^{o}F] acoustical fiberglass insulation. The insulation shall have fire resistant of Class O (BS 476 Part 6, 7). Access doors shall be provided for easy service and maintenance of unit internal parts.

3 COMPRESSOR & REFRIGERATION PIPING

Compressor(s) shall be scroll, refrigerant gas cooled and mounted on the base via vibration isolators. 1, 2, 3 or 4 refrigeration circuits shall be piped with copper tubing and include expansion valve with external equalizer, filter dryer, sight glass, pressure fittings of manual reset high pressure control and auto reset low pressure safety cutouts as well as charging/access ports in each circuit. The compressors comply with the internationally recognized standards CE and UL.

4 EVAPORATOR COIL

Evaporator coil shall be of draw through air design for uniform air distribution. The evaporator coil shall be quality construction of staggered row of 3/8”OD (model ACPSE Series 40 to 570P) and 1/2”OD (model ACPSE 640 and above) seamless copper tube, mechanically bonded to aluminium fins with galvanized coil plates. The coil shall be factory leak and pressure tested to 650psig [45 bar] under water. A galvanized and painted drain pan shall be provided to cover the entire coil area. The drain pan shall be designed to incorporate sloped gutter for complete condensate removal.

5 EVAPORATOR BLOWER AND MOTOR

Evaporator blower shall be direct-driven (model ACPSE Series 40 to 145P) and belt driven (model ACPSE Series 160P and above), double-inlet-double-width (DIDW) forward curved. All blowers are statically and dynamically balanced to ensure quiet operation and smooth performance. Heavy-duty V-belt fan drive with cast iron pulleys keyed and secured to the blower shaft shall be provided (model ACPSE Series 160P and above).

Motors shall be of totally enclosed fan cooled (TEFC) with IP55 enclosure rating, 4-poles with class F insulation. Motors shall be mounted to an adjustable motor frame. Motor pulleys shall be cast iron, keyed and secured to the motor shaft (model ACPSE Series 160P and above).

6 CONDENSER COIL

Condenser coil shall be air cooled with integral sub-cooling circuit, constructed from staggered row of 3/8”OD inner grooved seamless copper tube, mechanically bonded to aluminium fins with galvanized coil plates. The coil shall be factory leak and pressure tested to 650psig [45 bar] under water.

7 CONDENSER FAN AND MOTOR

Condenser fan shall be direct driven propeller type discharging air vertically upward. Condenser fans shall be constructed of corrosion resistant blades and are statically and dynamically balanced. Condenser fan motors shall be of totally enclosed fan cooled (TEFC) with IP55 enclosure rating, 6-poles with class F insulation and wired to unit control panel (model ACPSE 68P and above). The condenser fan assembly shall be provided with heavy gauge and rust resistant steel wire fan guard.

8 FILTERS

Units shall be provided with 1” (model ACPSE Series 40P to 145P) and 2” (model ACPSE Series 160P and above) thick washable pleated filters having average arrestance efficiency of 70% (model ACPSE Series 40P to 145P) and 75% (model ACPSE Series 160P and above) as per ASHRAE Standard 52.1 (or equivalent) with side loading.

9 CONTROL PANEL

The unit mounted control panel enclosure shall be constructed from heavy gauge galvanized steel with epoxy painted for excellent finished, weatherability and corrosion resistance. The enclosure shall conform to IP54. Hinged and lock type access door shall be provided for easy access and security. The control panel shall be wired without starter and control.

10 OPTIONS

10.1 Stainless Steel Drain Pan

A stainless steel condensate drain pan shall be provided for the evaporator section in lieu of standard galvanized and painted drain pan.

10.2 Hot Gas Bypass

The refrigerant circuit (applicable to ‘first in last out’ refrigeration system only) shall be provided with a hot gas bypass system for low load and low ambient condition (evaporator freeze protection).

10.3 Evaporator Coil Fin Materials

In lieu of standard aluminium fin, alternative fin material and/or protective coating include,

- Hydrophilic coated aluminium fin
- Copper Fin
- Aluminium fin with Airestec coating
- Copper fin with Airestec coating

GUIDE SPECIFICATIONS

10.4 Condenser Coil Fin Materials

In lieu of standard aluminium fin, alternative fin material and/or protective coating include,

- Hydrophilic coated aluminium fin
- Copper Fin
- Aluminium fin with Airestec coating
- Copper fin with Airestec coating

10.5 Condenser Coil Guard

Powder coated wire mesh guard shall be provided for better condenser coil protection.

10.6 High and Low Pressure Gauges

Each compressor is provided with unit mounted pressure gauges to monitor high and low side operating pressure.

10.7 Discharge / Suction / Liquid Line Service Valves

Service valves shall be provided at each refrigerant lines for service convenience.

10.8 Closed Cell Elastomer Insulation

½" (model ACPSE 40P to 145P) and 1" (model ACPSE 160P and above) thick closed cell elastomer insulation (Insulflex®) shall be provided in lieu of standard fiberglass insulation. Closed cell elastomer insulation shall comply Class O (BS476 Part 6) and Class 1 (BS476 Part 7) fire resistant standard.

10.9 1" Double Wall Fiberglass Casing (Evaporator Section)

1" double wall fiberglass casing shall be provided in lieu of single skin fiberglass casing (model ACPSE Series 160P and above).

10.10 1" Double Wall Polyurethane Casing (Evaporator Section)

1" double wall polyurethane casing shall be provided in lieu of single skin fiberglass casing (model ACPSE Series 640P and above) for superior thermal insulation.

10.11 Liquid Line Solenoid Valve (LLSV)

Factory fitted liquid line solenoid valve shall be provided for each refrigeration circuit.

10.12 Hot Water Heating Coil

Hot water coil shall be provided for heating purpose (hot water shall be field supplied).

10.13 Evaporator Blower Isolator

Rubber or spring isolator shall be provided to dampen vibration caused by motor and blower (model ACPSE Series 160P and above).

10.14 Replaceable Core Filter Drier

Replaceable filter core drier shall be provided in lieu of standard filter drier for the convenience of filter drier's core replacement.

10.15 Stainless Steel Fasteners

Stainless steel fasteners shall be provided in lieu of standard fasteners for corrosion resistance application.

10.16 Suction accumulator

Suction accumulator shall be provided to prevent liquid refrigerant migration to compressor.

10.17 C-Channel Structural Steel Base

C-channel structural steel base shall be provided in lieu of standard GI steel base for better structural support (model ACPSE Series 160 to 570P)

10.18 Belt Guard

Belt guard shall be provided for belt and pulley's non- contact exposure.

10.19 Electric Heater

Electric heater shall be provided for heating purpose.

10.20 Electronic Expansion Valve (EEV)

In lieu of standard thermal expansion valve, EEV shall be provided for precise superheat control (energy saving).

10.21 IEC DOL (Non UL)

The unit mounted control panel enclosure shall be constructed from heavy gauge galvanized steel with epoxy painted for excellent finished, weatherability and corrosion resistance. The enclosure shall conform to IP54. Hinged and lock type access door shall be provided for easy access and security. The control panel shall be factory wired and shall include compressor, evaporator fan motor and condenser fan motor circuit breaker and contactors, compressor and evaporator fan motor thermal overload relays, anti-recycling time delay relay, control circuit fuse, power and control circuit terminal blocks and features 230V controls with 380-415V/ 3PH/50HZ (+Neutral) power supply or 115V/230V/24V controls with 208V-230V/380/460V-3PH-60HZ power supply.

10.22 Carel Controller

Panel mounted thermostat is provided for the unit to control and maintain the room temperature at a constant level or set point.

10.23 Indicating Lights

Indication provided for high-pressure trip and compressor run.

10.24 UVR/Phase Failure Protect

Phase Failure Relay is provided for over voltage, under voltage and phase loss protection.

GUIDE SPECIFICATIONS

10.25 IP55 Control Panel

In lieu of standard control panel, IP55 Control Panel with double layer access door shall be design in according to IP55 standard is provided

10.26 Vision 2020i

The unit shall be provided with Vision 2020i control system with the following features,

- The control algorithm and parameters shall be stored in flash memory and EPROM of the controller and shall retain even in the event of power failures, without requiring a backup battery
- PGD Display
- Built in memory for data logging
- Temperature and humidity controlled
- Configurable by user
- Alarm status/display
- Analog input/output display
- Digital input/output status
- Remote start/stop input
- Digital input for customer input alarm
- General alarm output (dry contact)
- Self-diagnostics
- Security password access with multiple access level for advanced settings
- Unit status display

10.27 MODBUS RS485

MODBUS card can be added for BMS communication. VISION 2020i controller must be selected for this features.

10.28 Lock Out Stop

Emergency stop switch provided for Blower Fan.

10.29 Differential Pressure Switch for Evaporator Blower

Differential pressure switch provided to interlock with the control circuit.

10.30 Voltmeter

Voltmeter and selector switch provided for voltage display

10.31 Ammeter

Ammeter and selector switch provided for current display.

10.32 Anti Recycle Timer

Additional timer is added to prevent the compressor from starting for a period of time after it stops last.

10.33 Electric Heater Starter

Contactor and circuit breaker provided for electric heater.

10.34 Low Ambient Kit

Fan cycling for better performance during low ambient.

10.35 Compressor Soft Start

Soft-Starter for compressors to reduce the staring current.

10.36 Door Interlock Main Incoming Isolator

Incoming Isolator is provided for isolate the main incoming power supply to the unit.

10.37 Hinged Access Door

Hinged type access door shall be provided for model ACPSE Series 640P and above.

10.38 Star Delta Starter Evaporator Motor

Star Delta starting method available for Evaporator motor.

10.39 Nominal Evaporator Motor Soft Starter

Soft-Starter available to reduce the starting current for Nominal Evaporator motor.

10.40 Max Evaporator Motor Soft Starter

Soft-Starter available to reduce the starting current for Maximum sized Evaporator motor.

10.42 VFD for Condenser Motor

Variable Frequency Drive (VFD) on condenser fan motors (base fans) with pressure transducer added for more accurate control.

10.43 VFD for Evaporator Motor Nominal HP

Variable Frequency Drive (VFD) on Nominal Evaporator motor with pressure transducer.

10.44 VFD for Evaporator Motor Max HP

Variable Frequency Drive (VFD) on Maximum Evaporator motor with pressure transducer.

10.45 VFD Box

Control panel to mount Variable Frequency Drive (VFD).

10.46 Crankcase Heater

Crankcase Heater shall be provided to prevent liquid refrigerant migration and condensation of refrigerant in the crankcase of the compressor when the unit is off.

Malaysia

Lot 5755-6,
Kidamai Industrial Park,
Bukit Angkat,
43000 Kajang,
Selangor, Malaysia

Tel: +603-8924 9000
Fax: +603-8739 5020

China

No. 1 Dunham-Bush Road,
Laishan District,
Yantai,
Shandong Province,
China 264003

Tel: +86-535-739 7888
Fax: +86-535-739 7999

United Kingdom

8 Downley Road,
Havant,
Hampshire,
England PO9 2JD

Tel : +44-23-9247 7700
Fax: +44-23-9245 0396

United States of America

2125 NW 86th Ave
Doral, Florida 33122
United States of America

Tel: +305-883-0655
Fax: +786-527-3539

United Arab Emirates

Office # 2606,
Fortune Executive Towers,
Cluster T1, Jumeirah Lake Tower
Dubai, UAE

Tel: +971-4-443 9207
Fax: +971-4-443 9208

South Africa

No. 57 Sovereign Drive
Route 21 Corporate Park
Irene, Pretoria
South Africa

Tel: +27-12-345 4202
Fax: +27-12-345 4203

Singapore

2 Kallang Pudding Road
#07-07 Mactech Building
Singapore 349307

Tel: +65-6842 2012
Fax: +65-6842 2013

Indonesia

The Vida Building 7th Floor
Jl. Raya Pejuangan
No. 8 Kebon Jeruk
Jakarta 11530, Indonesia

Tel: +62-21-2977 8100
Fax: +62-21-2977 8001

Thailand

1 QHouse Lumpini,
27th Floor, South Sathorn Road,
Tungmahamek, Sathorn,
Bangkok Thailand 10120

Tel: +66-0-2610 3749
Fax: +66-0-2610 3601

Vietnam

10th Floor, Nam A Bank Tower,
201-203 Cach Mang Thang 8 Street,
District 3, Ho Chi Minh City,
Vietnam

Tel: +84-8-6290 3108
Fax: +84-8-6290 3109

DUNHAM-BUSH®

info@dunham-bush.com
www.dunham-bush.com

SINGAPORE GREEN BUILDING COUNCIL

Products that perform...By people who care

Manufacturer reserves the right to change specifications without prior notice.

MS-0225B-0316