WCS Series 50Hz

Water Cooled Scroll Direct Expansion Chillers

Cooling Capacity: 12 to 53 TR (42 to 186 kW)

R407C

DUNHAM-BUSH

Products that perform...By people who care

TABLE OF CONTENTS

NOMENCLATURE

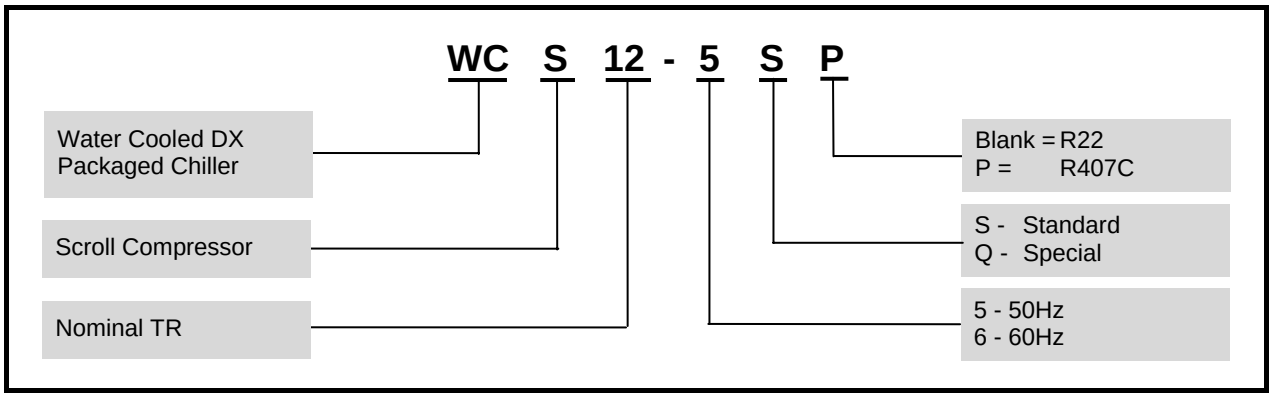

STANDARD FEATURES

Size Range

- 8 models from 12 to 53 TR [42 to 186 kW].
- Standard version available.
- Rated with R407C. Consult factory for use of other HFC refrigerants.

Compressor

- Scroll hermetic type operating at 2950 RPM (50Hz).
- High EER, low sound power level and high reliability.
- Controlled orbit with floating seals and advanced scroll geometry.
- No-contact scroll design and 100% motor cooled by suction gas.
- Thermostat fitted to prevent thermal overload.
- Capability of 50% tandem unloading.

Evaporator

- Vessels constructed in accordance to ASME CODES Sections Vlll Division I for unfired pressure vessels.
- Dunham-Bush high efficiency inner-fin tubes design for compactness and weight reduction.
- 250psig [17bar] on refrigerant side design pressure.
- 150psig [10bar] on water side design pressure.
- Approval Stamp available from JKKP (Malaysia), UDT (Poland), BPA, China State Bureau of Quality and Technical Supervision of the People's Republic of China and ASME.
- 1"[25mm] thick PE foam closed cell insulation.

Condenser

- Vessels constructed in accordance to ASME CODES Sections Vlll Division I for unfired pressure vessels.
- Removable heads and interchangeable end-for-end for job flexibility.
- 3/4"[19mm] OD seamless, extended surface copper tubes.
- 300psig [21bar] on refrigerant side design pressure.
- 150psig [10bar] on water side design pressure.
- Approval Stamp available from JKKP (Malaysia), UDT (Poland), BPA, China State Bureau of Quality and Technical Supervision of the People's Republic of China and ASME.

Electrical/Control

- Reliable microprocessor based controller with electromechanical system is standard for all models.
- Chilled water pump control.

OPERATING BENEFITS

FIGURE 1 : SCROLL COMPRESSOR

1. **DELIVERING THE HIGHEST EFFICIENCY**
   Scroll compressor gives efficiencies 10% higher than any competitive compressor on the market today – at the right conditions.

2. **DELIVERING THE QUIETEST OPERATION**
   Scroll technology gives you compressor operation that is many times quieter than other technologies.

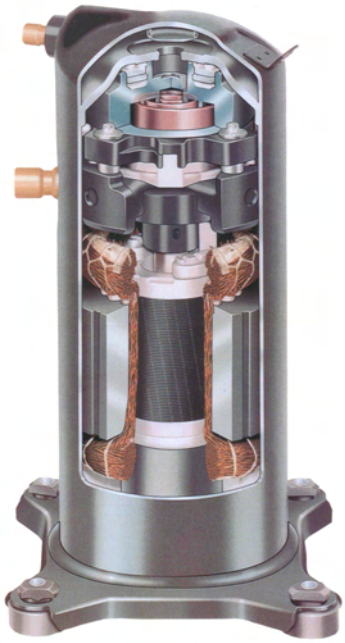

3. **DELIVERING THE INDUSTRY'S BEST VALUE**
   Scroll compressor clearly delivers more system value because of its high efficiency, fewer required components, increased reliability and quieter operation.

4. **DELIVERING FOR THE FUTURE**
   Scroll compressor is by far the most advanced products in the industry today for air conditioning, refrigeration and heat pump applications.

FIGURE 2: PRINCIPLE OF SCROLL COMPRESSION

The scroll is a simple compression concept first patented in 1905. A scroll is an involute spiral which, when matched with a mating scroll form as shown above, generates a series of crescent-shaped gas pockets between the two members. During compression, one scroll remains stationary (fixed-scroll) while the other form (orbiting scroll) is allowed to orbit (but not rotate) around the first form. As this motion occurs, the pockets between the two forms are slowly pushed to the center of the two scrolls while simultaneously being reduced in volume. When the pocket reaches the center of the scroll form, the gas, which is now at a high pressure, is discharged out of a port located at the center. During compression, several pockets are being compressed simultaneously, resulting in a very smooth process. Both the suction process (outer portion of the scroll members) and the discharge process (inner portion) are continuous.

Compression in the scroll is created by the interaction of an orbiting spiral and a stationary spiral. Gas enters the outer openings as one of the spirals orbits.

The open passages are sealed off as gas is drawn into the spiral.

As the spiral continues to orbit, the gas is compressed into two increasingly smaller pockets.

By the time the gas arrives at the center port, discharge pressure has been reached.

Actually, during operation, all six gas passages are in various stages of compression at all times, resulting in nearly continuous suction and discharge.

SYSTEM CONTROL

CAPACITY CONTROL

The standard system capacity control operates as follows:

- As the chiller load initially drops, the suction of the compressor(s) starts dropping proportionately, thus balancing minor load variations.
- Variation of unit capacity in response to system load requirements is controlled by an operating thermostat, which monitors the return water temperature.
- On multiple compressor units, capacity is controlled by compressor staging.

ELECTRICAL CONTROLS

MCCB/ MCB - Main Circuit Breaker

This is an automatic, calibrated, ambient compensated, magnetic trip circuit breaker, which provides both direct line-break compressor branch circuit. short circuit locked rotor and overload protection. It has a manually operable handle for compressor circuit disconnect.

M - Contactor

The Contactor, operated by the control circuit, provides power individually to the compressors. Contactors are used in single across-the-line start. This device is amp rated to handle both rated load amp and locked rotor amps.

CR - Relays (Miscellaneous Control)

These relays provide the necessary circuit logic for lock-in, lock -out and control functions.

HTR - Crankcase Heater

Energized continuously as long as control circuit power disconnect switch (not supplied with the unit) is closed and compressor is off. This heater maintains crankcase temperature above the system temperature during the compressor off cycle, preventing refrigerant migration into the crankcase and consequent cause compressor damage.

SOL - Liquid Line Solenoid Valve

Closes when the compressor(s) is off to prevent any liquid refrigerant from accumulating in the chiller during the off cycle.

OL - Motor Overload (Manual Reset)

The compressors are protected by thermal overload relays. The overload relays are manually reset.

PCR or UVR - Phase Control Relay (Optional)

Protects the unit from the following electric supply malfunctions: Under voltage, phase reversal, phase loss and phase imbalance. If the PCR or UVR trips, a control relay will de-energize and open the control circuit. A red LED trip light, located on the PCR or UVR, will indicate a supply malfunction. Tile PCR or UVR is a Auto reset control device.

PHYSICAL SPECIFICATIONS

Model WCS		12-5SP	17-5SP	20-5SP	25-5SP	30-5SP	35-5SP	40-5SP	50-5SP
Unit Nominal Capacity	**TR[kW]**	14[49]	17.5[61.5]	22[77]	26[91]	29[102]	35[123]	45[158]	53[186]
Unit Nominal Power Input	**kW**	10.5	14	19	21.5	22.6	28.4	36.2	43.2
COMPRESSOR									
Compressors Type (Qty)		Single (2)	Single (2)	Single (2)	Single (2)	Single (1) Tandem (1)	Tandem (2)	Tandem (2)	Tandem (2)
% Step Capacity		0,50,100	0,50,100	0,50,100	0,50,100	0,50,75,100	0,25,50,75,100	0,25,50,75,100	0,25,50,75,100
EVAPORATOR									
Model		CHD006601A	CHD006601B	CHD007601A	CHD007601B	CHD008601A	CHD008601A	CHD010601A	CHD011601B
Water Volume	**USGal[Liters]**	3.9 [14.8]	3.9 [14.8]	5.5 [20.8]	5.5 [20.8]	8.1 [30.7]	8.1 [30.7]	10.7 [40.6]	12.9 [48.9]
Minimum Flow Rate	**USgpm[m³/hr]**	24.4 [5.5]	35 [7.9]	46.4 [10.5]	59.5 [13.5]	66.8 [15.2]	65 [14.8]	77 [17.5]	101.5 [23]
Maximum Flow Rate	**USgpm[m³/hr]**	42.7 [9.7]	70.5 [16]	77 [17.5]	114 [25.9]	127.6 [29]	112.8 [25.6]	154.5 [35.1]	231 [52.4]
Pressure Drop	**ft.wg[kPa]**	19.9 [59.7]	10.8 [32.3]	14.6 [43.8]	8 [24]	9.5 [28.5]	13.4 [40.2]	6.3 [18.9]	9.6 [28.8]
Water Conn. Size	**inches[mm]**	3[76] MPT	3[76] MPT	3[76] MPT	3[76] MPT	3[76] MPT	3[76] MPT	4[102] MPT	4[102] MPT
CONDENSER									
Model		CDS06D080 ART	CDS06D080 ART	CDS06D080 BRT	CDS08D080 ART	CDS08D080 BRT	CDS08D080 CRT	CDS10D080 ART	CDS10D080 BRT
Water Volume	**USGal[Liters]**	2.5 [9.5]	2.8 [10.6]	3.3 [12.5]	4.6 [17.4]	4.9 [18.6]	5.6 [21.2]	7.7 [29.2]	8.9 [33.7]
Minimum Flow Rate	**USgpm[m³/hr]**	24 [5.4]	25 [5.7]	24 [5.4]	40 [9.1]	42 [9.5]	46 [10.4]	62 [14.1]	75 [17]
Maximum Flow Rate	**USgpm[m³/hr]**	75 [17]	77 [17.5]	77 [17.5]	121 [27.5]	134 [30.4]	140 [31.8]	197 [44.7]	235 [53.3]
Pressure Drop	**ft.wg[kPa]**	5.2 [15.6]	8 [24]	13.3 [39.9]	9.7 [29.1]	11.3 [33.9]	15.5 [46.5]	6.7 [20.1]	7 [21]
Water Conn. Size	**inches[mm]**	2[51] MPT	2[51] MPT	2[51] MPT	2[51] MPT	2[51] MPT	2[51] MPT	4[102] MPT	4[102] MPT
ELECTRICAL									
Compressor (Each):	**RLA**	11	14	18	23	12, 23	14	17	23
	LRA	95	118	140	174	111, 174	118	140	174
Unit Data :	**RLA**	22	28	36	46	118	56	68	92
	MCA	25	32	41	52	140	60	72	98
	MFS	35	45	50	70	174	70	80	110
GENERAL									
Unit Length	**inches[mm]**	92 1/2 [2350]	92 1/2 [2350]	92 1/2 [2350]	92 1/2 [2350]	92 1/2 [2350]	92 1/2 [2350]	94 1/4 [2394]	94 1/4 [2394]
Unit Width	**inches[mm]**	24 [610]	24 [610]	24 [610]	24 [610]	34 [864]	34 [864]	35 [889]	35 [889]
Unit Height	**inches[mm]**	60 [1556]	60 [1556]	60 1/2 [1537]	62 1/2 [1588]	57 7/8 [1470]	57 7/8 [1470]	61 [1549]	62 [1575]
Unit Shipping Weight	**lbs[kg]**	1367 [620]	1399 [635]	1508 [684]	1743 [791]	2167 [983]	2368 [1074]	2922 [1325]	3366 [1527]
Unit Operating Weight	**lbs[kg]**	1482 [672]	1526 [692]	1635 [742]	1934 [877]	2370 [1075]	2570 [1166]	3258 [1478]	3717 [1686]
Refrigerant Charge, R407C	**lbs[kg]**	26 [12]	37 [17]	45 [20]	55 [25]	63 [29]	75 [34]	94 [43]	110 [50]

Legend: RLA - Rated Load Amps LRA - Locked Rotor Amps MCA - Minimum Circuit Ampacity MFS - Maximum Fuse Size

Note: Nominal capacity is based on evaporator LWT 44°F and condenser EWT 85°F, actual capacity depends on the specified operating conditions.

PERFORMANCE DATA

Model WCS	Leaving Chilled Water Temp. °F	Condenser Water Entering Temp. °F					
		75		85		95	
		TR	kW[I]	TR	kW[I]	TR	kW[I]
12-5SP	42	12.5	8.8	11.7	10.0	10.8	11.3
	44	13.0	8.8	12.2	10.0	11.3	11.2
	46	13.6	8.8	12.7	9.9	11.8	11.2
	48	14.2	8.8	13.3	9.9	12.3	11.2
	50	14.8	8.8	13.8	9.9	12.9	11.2
17-5SP	42	17.8	12.4	16.6	14.5	15.5	15.9
	44	18.6	12.4	17.9	14.5	16.2	15.9
	46	19.4	12.3	18.3	14.5	16.9	15.9
	48	20.2	12.3	18.9	14.5	17.6	15.8
	50	21.1	12.3	19.8	14.4	18.4	15.8
20-5SP	42	22.0	15.5	20.6	17.3	19.1	19.5
	44	23.0	15.5	21.5	17.4	20.0	19.6
	46	24.0	15.6	22.5	17.4	20.9	19.6
	48	25.1	15.7	23.4	17.5	21.8	19.6
	50	26.1	15.7	24.5	17.5	22.7	19.7
25-5SP	42	27.0	19.0	25.3	21.4	23.6	24.2
	44	28.1	19.0	26.4	21.4	24.6	24.1
	46	29.3	19.0	27.6	21.3	25.7	24.1
	48	30.6	18.9	28.7	21.3	26.9	24.0
	50	31.9	18.9	30.0	21.2	28.0	24.0
30-5SP	42	31.3	21.9	29.3	25.2	27.3	28.0
	44	32.7	21.8	31.1	25.2	28.5	27.9
	46	34.1	21.8	32.1	25.1	29.7	27.9
	48	35.5	21.8	33.3	25.1	31.1	27.8
	50	37.0	21.7	34.7	25.0	32.4	27.8
35-5SP	42	35.6	24.7	33.3	29.0	30.9	31.8
	44	37.2	24.7	35.8	29.0	32.3	31.7
	46	38.8	24.7	36.6	29.0	33.8	31.7
	48	40.5	24.6	37.9	28.9	35.2	31.6
	50	42.2	24.6	39.5	28.8	36.8	31.6
40-5SP	42	44.1	30.9	41.2	34.7	38.3	39.0
	44	46.0	31.0	43.0	34.7	40.0	39.1
	46	48.0	31.2	44.9	34.8	41.7	39.2
	48	50.1	31.3	46.9	34.9	43.6	39.2
	50	52.3	31.4	48.9	35.0	45.5	39.3
50-5SP	42	53.9	38.0	50.6	42.8	47.2	48.3
	44	56.3	38.0	52.8	42.7	49.3	48.2
	46	58.7	37.9	55.1	42.6	51.5	48.1
	48	61.2	37.9	57.5	42.6	53.7	48.0
	50	63.8	37.8	59.9	42.5	56.0	47.9

DIMENSIONAL DATA

WCS 12-5SP, 17-5SP, 20-5SP, 25-5SP

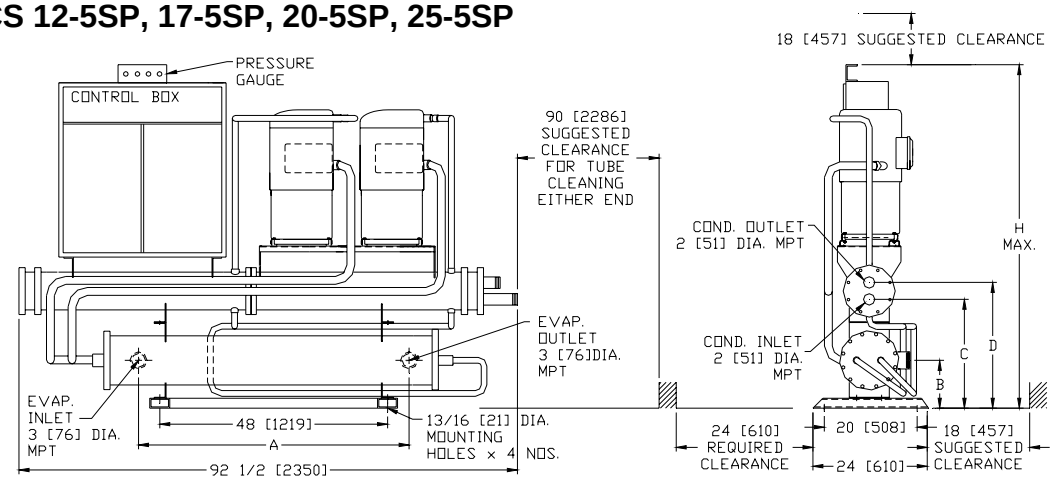

MODEL WCS	A	B	C	D	H
WCS 12-5SP	56 [1422]	7 13/16 [198]	17 15/16 [456]	20 15/16 [532]	60 [1556]
WCS 17-5SP	56 [1422]	7 13/16 [198]	17 15/16 [456]	20 15/16 [532]	60 [1556]
WCS 20-5SP	56 1/8 [1426]	7 13/16 [198]	19 3/16 [487]	22 3/16 [564]	60 1/2 [1537]
WCS 25-5SP	56 1/8 [1426]	8 7/16 [214]	19 15/16 [507]	23 7/16 [595]	62 1/2 [1588]

WCS 30-5SP

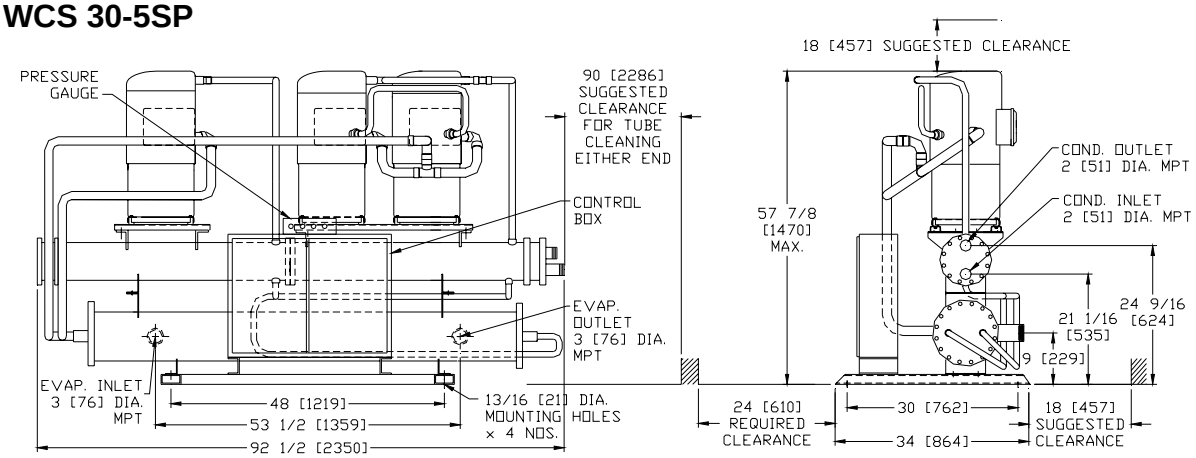

WCS 35-5SP, 40-5SP, 50-5SP

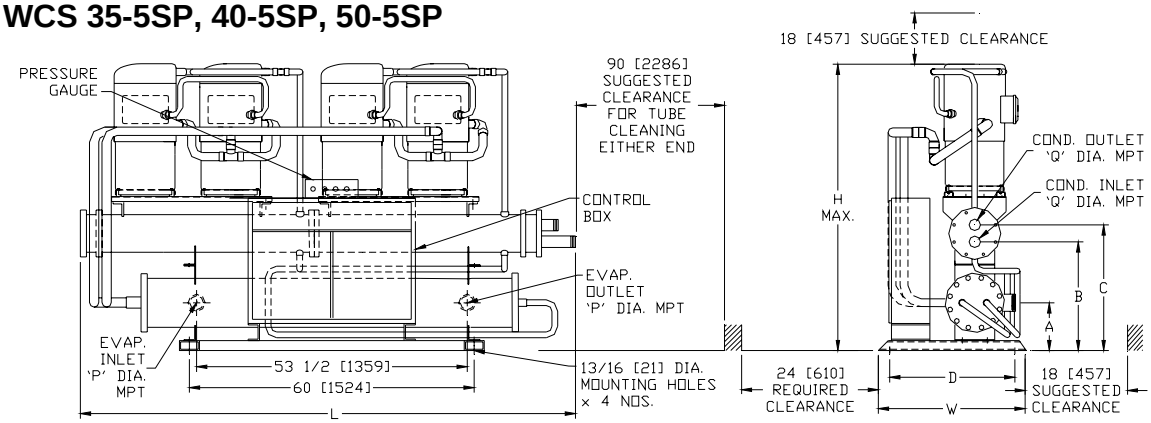

MODEL	A	B	C	D	P	Q	H	L	W
WCS 35-5SP	9 [229]	21 1/16 [535]	24 9/16 [624]	30 [762]	3 [76]	2 [51]	57 7/8 [1470]	92 1/2 [2350]	34 [864]
WCS 40-5SP	9 9/16 [243]	22 [559]	28 [711]	31 [787]	4 [102]	4 [102]	61 [1549]	94 1/4 [2394]	35 [889]
WCS 50-5SP	10 1/8 [257]	23 1/8 [664]	29 1/8 [740]	31 [787]	4 [102]	4 [102]	62 [1575]	94 1/4 [2394]	35 [889]

Notes:
1.) Water piping to be support to minimize load on unit.
2.) All dimensions are in inches[mm].
3.) Spring isolators are optional. If spring isolators are installed, flexible connection shall be used to provide isolation in condenser water and chilled water pipes.
4.) Sufficient room must be allowed for evaporator and condenser water connection.
5.) Dimension do not include evaporator insulation.
6.) Tolerance for all dimension ±0.5 inches [±12.7mm].
7.) Compressor layout shown in this drawing are typical type and layout varied depend on the model.
8.) Vessel header construction can be in dome or flat head. Dimension tolerance will be 3 inches max. per dome head.

PRESSURE DROP

IMPERIAL UNITS

EVAPORATOR

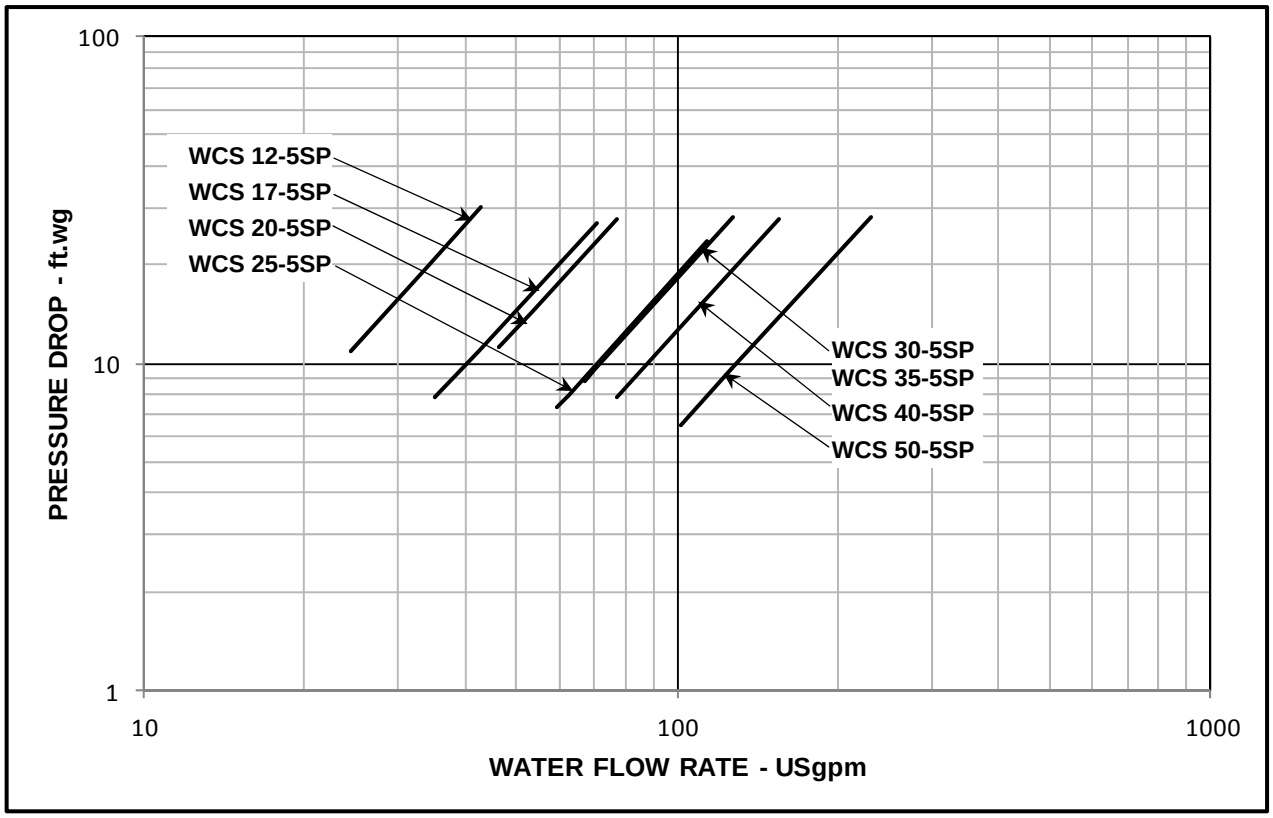

CONDENSER

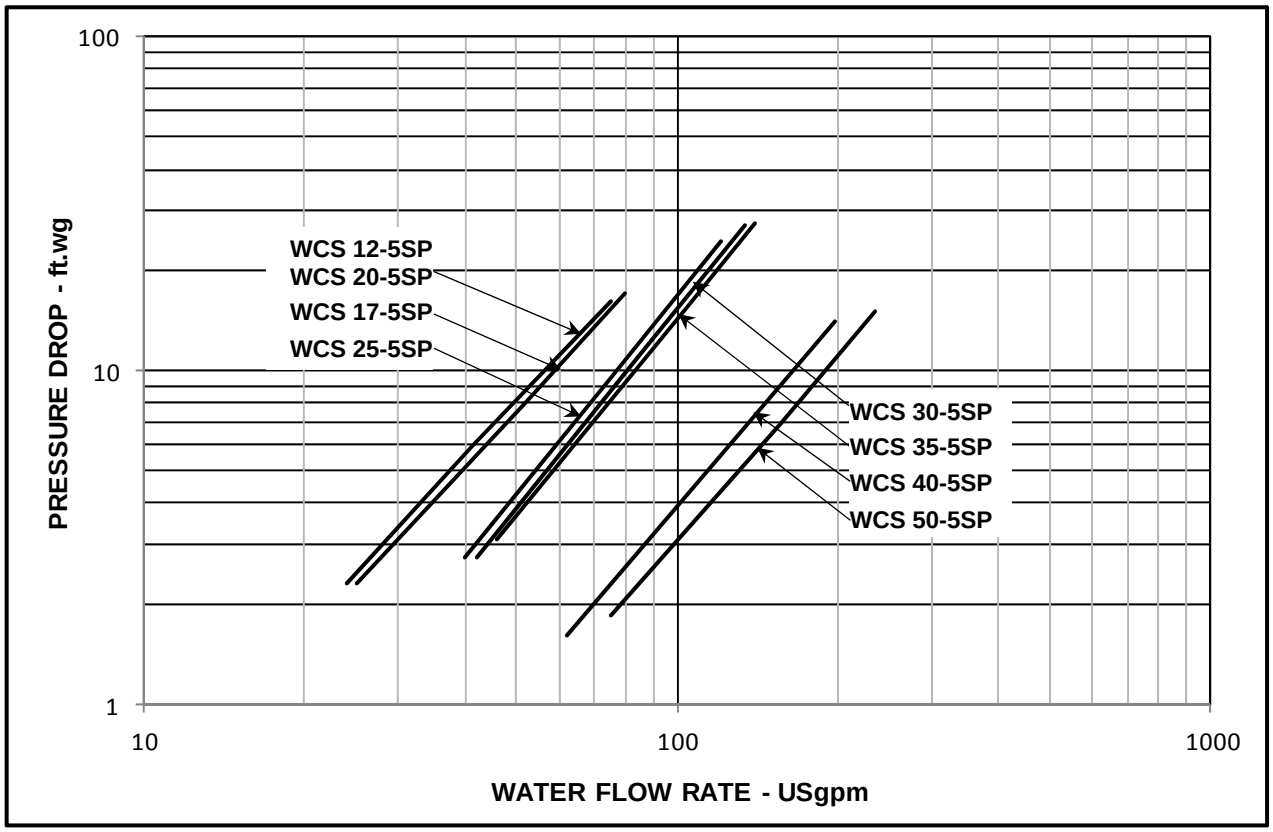

PRESSURE DROP

S.I. UNITS

EVAPORATOR

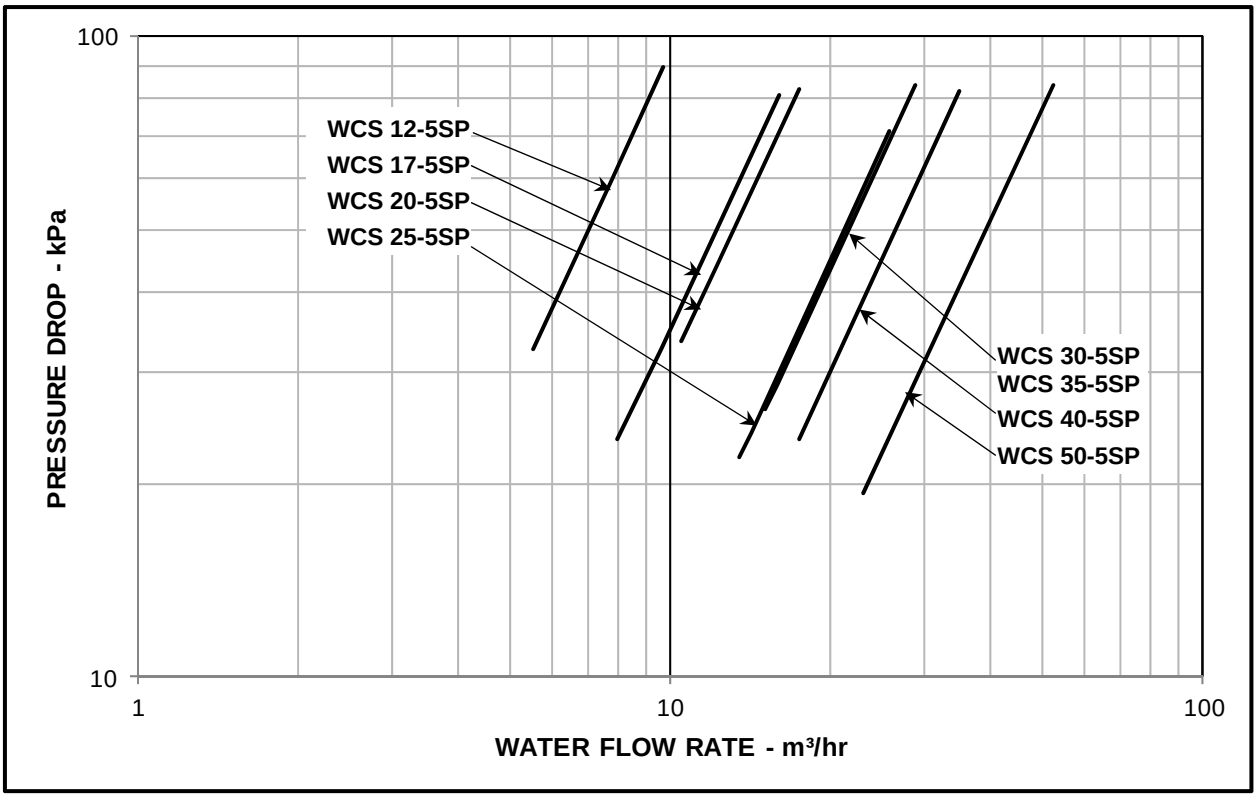

CONDENSER

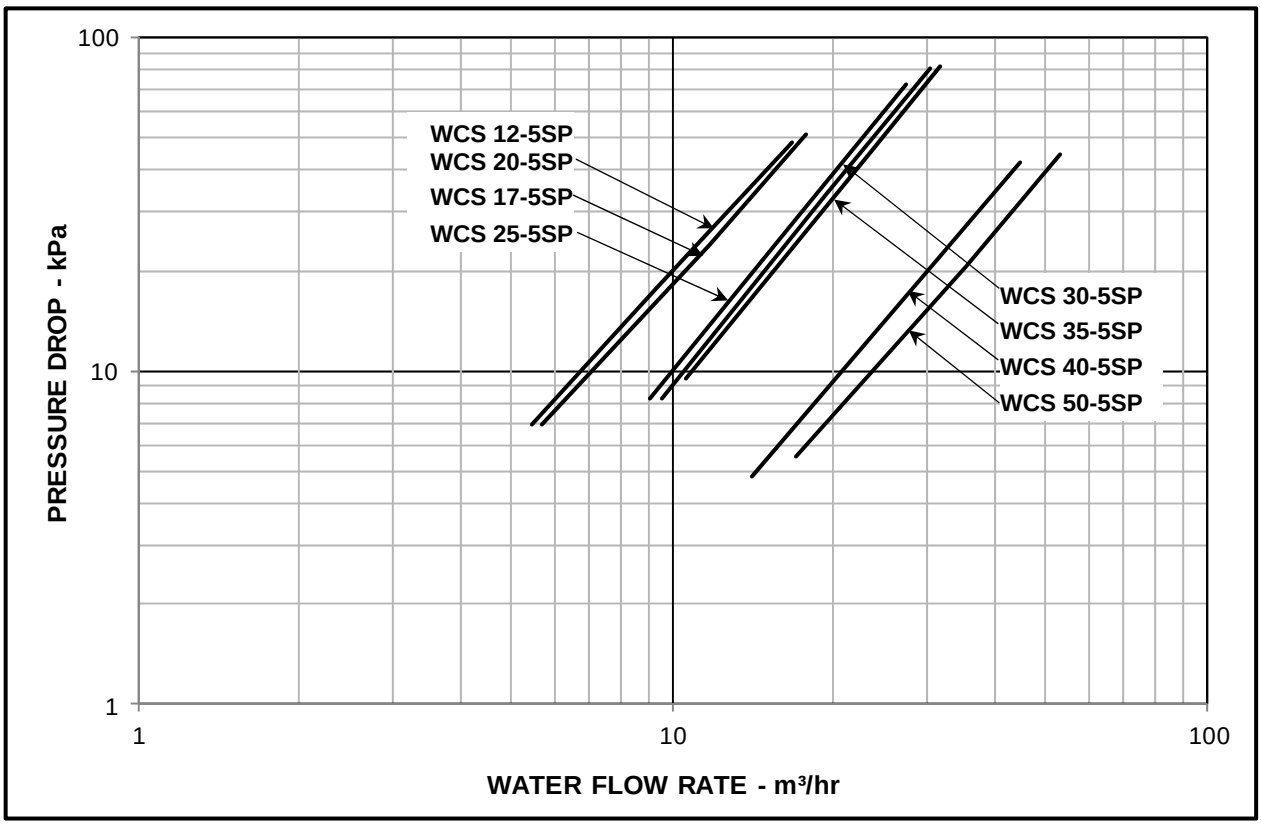

FLOOR LOADING DIAGRAM

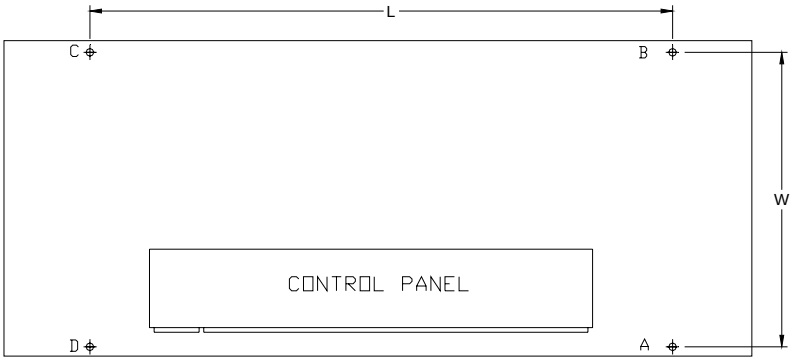

POINT LOAD LOCATION AND DATA

Model WCS	Dimensions - inches[mm]		Loads – lbs[kg]				Total Operating Weight – lbs[kg]
	L	W	A	B	C	D	
12-5SP	92 1/2 [2350]	24 [610]	412 [187]	412 [187]	329 [149]	329 [149]	1482 [672]
17-5SP	92 1/2 [2350]	24 [610]	423 [192]	423 [192]	340 [154]	340 [154]	1526 [692]
20-5SP	92 1/2 [2350]	24 [610]	460 [209]	460 [209]	358 [162]	358 [162]	1636 [742]
25-5SP	92 1/2 [2350]	24 [610]	543 [246]	543 [246]	424 [192]	424 [192]	1934 [877]
30-5SP	92 1/2 [2350]	34 [864]	620 [281]	566 [257]	565 [256]	619 [281]	2370 [1075]
35-5SP	92 1/2 [2350]	34 [864]	636 [288]	623 [283]	649 [294]	663 [301]	2571 [1166]
40-5SP	94 1/4 [2394]	35 [889]	842 [382]	787 [357]	787 [357]	842 [382]	3258 [1478]
50-5SP	94 1/4 [2394]	35 [889]	957 [434]	902 [409]	902 [409]	957 [434]	3718 [1686]

SOUND PRESSURE DATA

Model WCS	Octave Band (Hz)								Total dB (A)
	63	125	250	500	1K	2K	4K	8K	
12-5SP	21	23	45	57	58	57	52	43	**63**
17-5SP	21	24	46	58	59	61	55	46	**65**
20-5SP	21	28	47	59	59	62	58	52	**66**
25-5SP	21	31	50	59	59	62	57	49	**66**
30-5SP	24	32	51	61	62	64	60	51	**68**
35-5SP	24	26	47	61	62	61	60	51	**68**
40-5SP	24	31	50	62	62	65	61	55	**69**
50-5SP	24	34	53	62	62	65	60	52	**69**

Note: Sound Pressure Level (Lp), dB(A) ± 2 dB @ 3.3ft [1m] Free Field.

ELECTRICAL DATA

Model WCS	Compressor Data (Qty)			Unit Electrical Data		
	Model	RLA	LRA	FLA	MCA	MFS
12-5SP	ZR94KCE, ZR94KCE	11 (2)	95 (2)	22	25	35
17-5SP	ZR125KCE, ZR125KCE	14 (2)	118 (2)	28	32	45
20-5SP	ZR160KCE, ZR160KCE	18 (2)	140 (2)	36	41	50
25-5SP	ZR190KCE, ZR190KCE	23 (2)	174 (2)	46	52	70
30-5SP	ZR108KCE, ZR108KCE, ZR190KCE	12 (2) 23	111 (2) 174	47	53	70
35-5SP	ZR125KCE, ZR125KCE, ZR125KCE, ZR125KCE	14 (4)	118 (4)	56	60	70
40-5SP	ZR160KCE, ZR160KCE, ZR160KCE, ZR160KCE	17 (4)	140 (4)	68	72	80
50-5SP	ZR190KCE, ZR190KCE, ZR190KCE, ZR190KCE	23 (4)	174 (4)	92	98	110

Note: RLA - Rated Load Amps
MCA - Minimum Circuit Ampacity
LRA - Locked Rotor Amps
MFS - Maximum Fuse Size
FLA – Full Load Amps

TYPICAL WIRING DIAGRAM

2 SINGLE COMPRESSOR

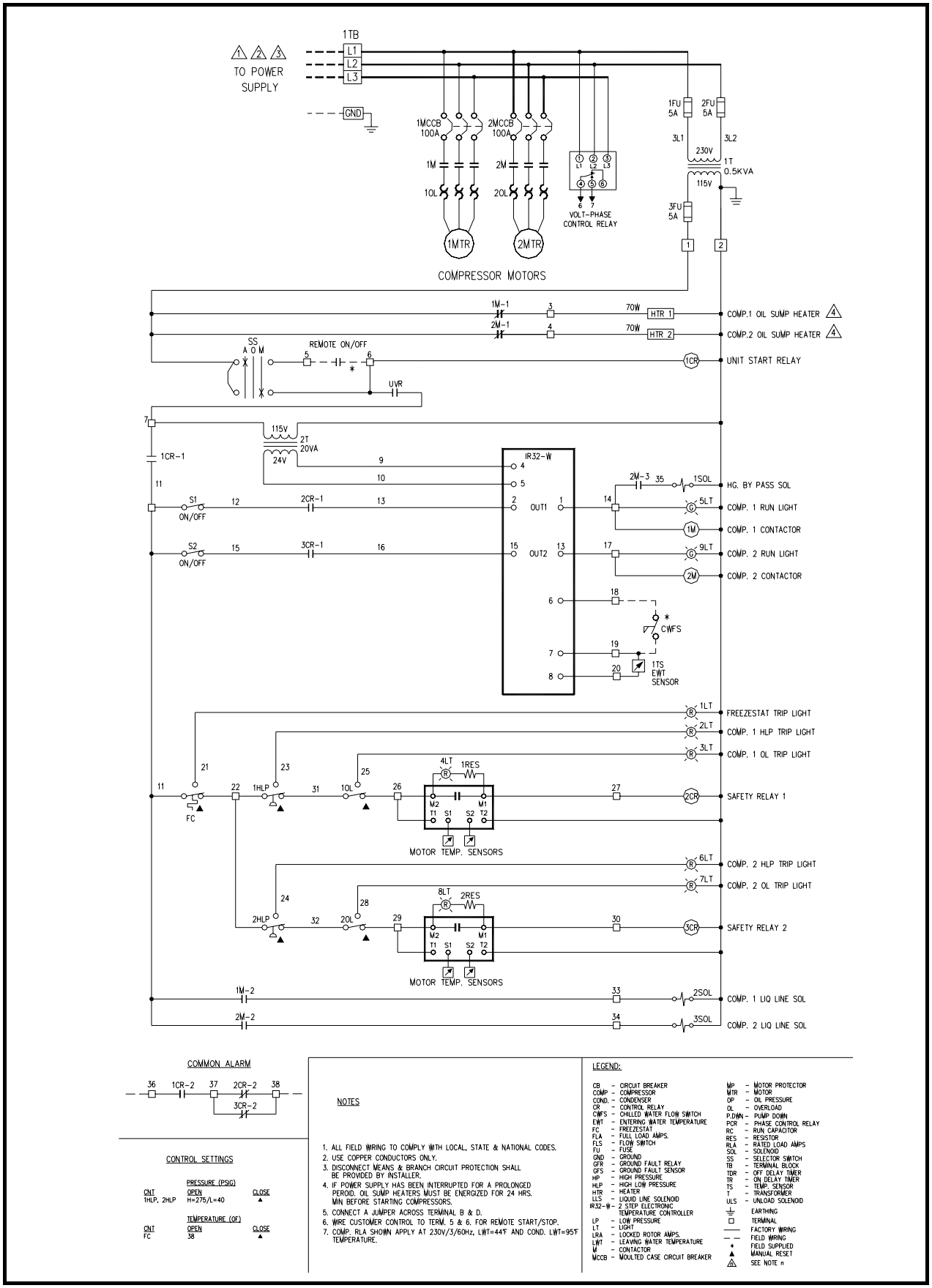

TYPICAL WIRING DIAGRAM

2 TANDEM COMPRESSOR

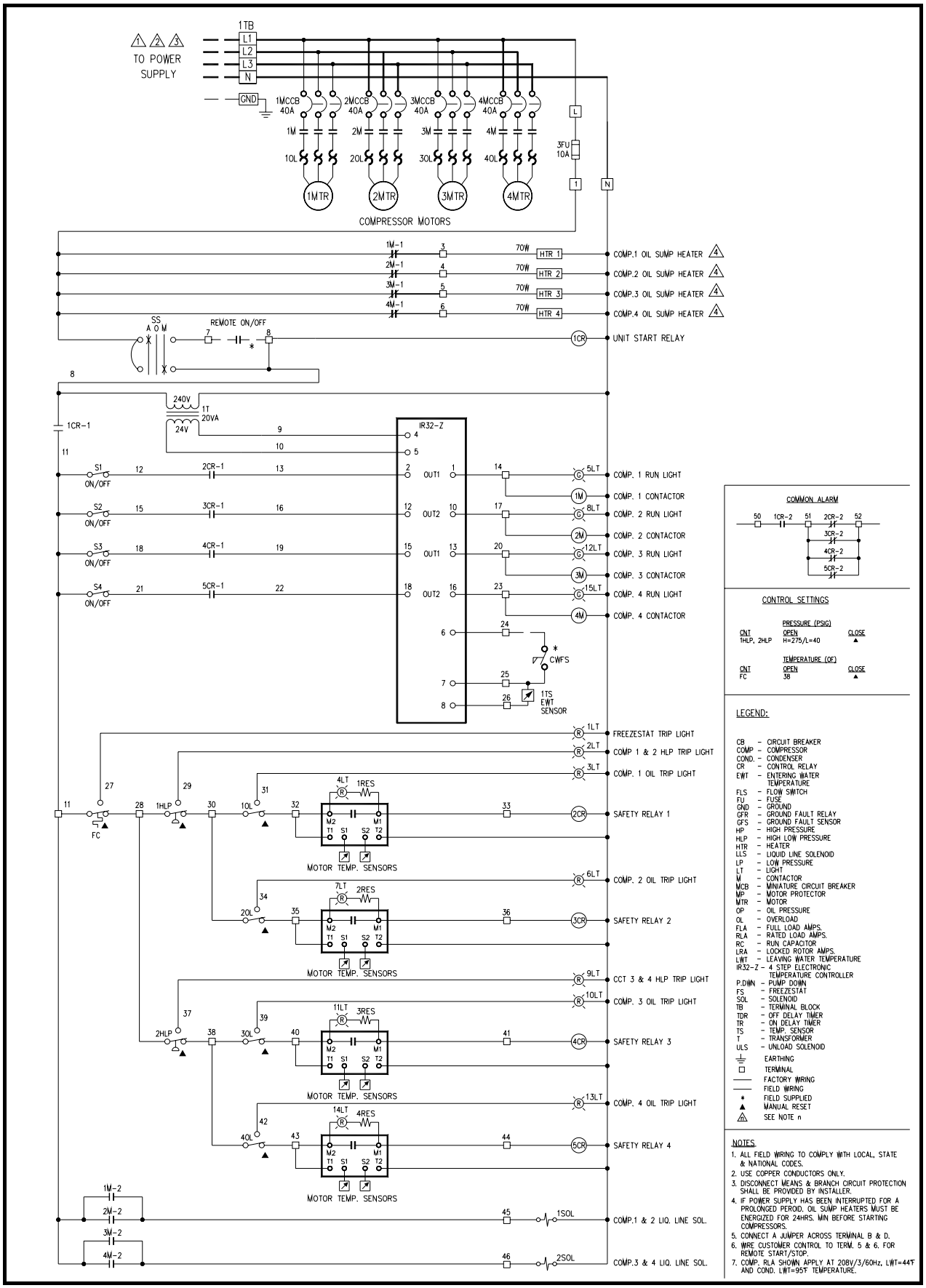

Malaysia

Lot 5755-6, Kidamai Industrial Park,
Bukit Angkat,
43000 Kajang,
Selangor Darul Ehsan,
Malaysia

Tel: 603-8924 9000
Fax: 603-8739 5020

China

No. 1 Dunham-Bush Road,
Laishan District,
Yantai,
Shandong Province,
China 264003

Tel: 86-535-658 8999
Fax: 86-535-658 1999

Europe

United Kingdom

8 Downley Road,
Havant, Hampshire,
England PO9 2JD

Tel: 44-23-9247 7700
Fax: 44-23-9245 0396

Middle East & North Africa

United Arab Emirates

Al Murad Tower, Office 506
Al-Barsha 1,
P. O. Box # 30922,
Dubai, UAE

Tel: 971-4-451 9899
Fax: 971-4-451 9881

Asia

Singapore

2, Kallang Pudding Road #07-07,
Mactech Industrial Building,
Singapore 349307

Tel: 65-6842 2012
Fax: 65-6842 2013

Africa

South Africa

No. 57 Sovereign Drive
Route 21 Corporate Park
Irene, Pretoria
South Africa

Tel: 27-12-345 4202
Fax: 27-12-345 4203

Please Scan Here

for quick link to Dunham-Bush website

DUNHAM-BUSH

info@dunham-bush.com
www.dunham-bush.com

Products that perform...By people who care

M-S-0485B-0813